JAN/FEB, 1984
ISSN: 0614-4114

PROTECTIVE COVER

SECOND CLASS POSTAGE PAID
AT DES MOINES, IOWA

Woodsmith
2200 Grand Ave, Des Moines, IA 50312

[redacted]

POSTMASTER:
ADDRESS CORRECTION REQUESTED

Woodsmith™
Woodsmith™
Woodsmith™
Woodsmith™
Woodsmith™

Woodsmith® BACK ISSUE OFFER

☐ **Complete Set:**
☐ A total of 30 *Woodsmith* Back Issues: $49.95

☐ **Special Packages:**
☐ **Any 24 issues:** $39.95
☐ **Any 18 issues:** $29.95
☐ **Any 12 issues:** $19.95
☐ **Any 6 issues:** $10.95

☐ **Single Issues:**
☐ Issues 1 through 18: $2.00 each
☐ Issues 19 through 30: $2.50 each

Circle Back Issues you want:

1	2	3	4	5	6	7	8	9
10	11	12	13	14	15	16	17	18
19	20	21	22	23	24	25	26	27
28	29	30						

☐ ***Woodsmith* Three-Ring Binder:** $7.95
☐ ***Woodsmith* Router Table Plans:** $1.00

Payment:
Total amount enclosed for Back Issues ... $_____
Woodsmith Binder ..... $_____
Router Table Plans* ..... $_____
Total $_____

**Free with any purchase over $20.*

Send To: *Woodsmith* Back Issues
2200 Grand Avenue
Des Moines, Iowa 50312

Name (please print)

Address

City State Zip 031

HOW TO ORDER

A complete list of the *Woodsmith* Back Issues appears on the last two pages of this protective cover. Look them over and then use the form above to order the individual copies or the special package you want.

☐ **Complete Set Of 30 Back Issues: $49.95**
A complete set of Back Issues includes all 30 issues published to date. By getting the complete set you'll have an entire library of woodworking plans, techniques, and information right at your finger-tips. The regular price of these issues is $78. But by ordering the complete set you save $18.

☐ **Special Money-Saving Packages:**
If you prefer, you can order only those Back Issues that contain the woodworking plans and information you want.

☐ Any 24 issues (your choice), only $39.95
☐ Any 18 issues (your choice), only $29.95
☐ Any 12 issues (your choice), only $19.95
☐ Any 6 issues (your choice), only $10.95

☐ **Single Issues.**
You can add to the above packages, or order just one or two single issues at the regular prices:
Issues #1 through #18 are $2.00 each
Issues #19 through #25 are $2.50 each.

☐ ***Woodsmith* Binder.**
The perfect way to store all your Back Issues is with the *Woodsmith* three-ring Binder. This extra-large binder usually costs over $10. But with this special offer the price is only $7.95

☐ ***Woodsmith* Router Table Plans.**
The complete plans for building your own router table. This is the same router table we use in the *Woodsmith* shop to build many of the projects shown in each issue.

3-RING BINDER

The perfect way to store your back issues is in this *Woodsmith* Binder. It will easily accommodate up to 18 issues, and has extra pockets inside to hold shop notes.

- Heat-welded edges
- Lever-action snap rings
- Soft-padded covers
- Gold embossed logo

ROUTER TABLE PLANS*

**Free with any purchase over $20.*

Get the most out of your router by mounting it to the *Woodsmith* router table. It was designed and built in the *Woodsmith* shop — with woodworkers in mind. Many of the plans shown in each issue use the unique features of this router table, and we wouldn't be without it. The complete plans are only $1.00*.

NO. 31 NOTES FROM THE SHOP $2.50

Woodsmith®

PROJECTS:

- ADJUSTABLE DESK
- ROLL-AROUND CADDY
- TWO-TRAY IN/OUT BOX

ROUTERS

A BUYER'S GUIDE:
WHICH ROUTER IS BEST?

Woodsmith®

Number 31 **Jan/Feb, 1984**

Editor
Donald B. Peschke

Design Director
Ted Kralicek

Assistant Editors
Steve Krohmer
Michael P. Scott

Assistant Art Director
Kay Mulder

Technical Illustrators
David Kreyling
Mike Henry

Subscription Manager
Sandy J. Baum

Subscription Assistants
Christel Miner
Vicky Robinson
Jackie Stroud
Shirley Feltman
Ann Williams

Computer Operations
Ken Miner

Circulation Manager
Jeff Farris

Administrative Assistant
Cheryl Scott

Building Maintenance
Archie Krause

WOODSMITH (ISSN 0164-4114) is published bimonthly (January, March, May, July, September, November) by Woodsmith Publishing Co., 2200 Grand Ave., Des Moines, Iowa 50312.

WOODSMITH is a registered trademark of the Woodsmith Publishing Co.
©**Copyright 1984** by Woodsmith Publishing Co. All Rights Reserved.

Subscriptions: One year (6 issues) $10, Two years (12 issues) $18. Single copy price, $2.50 (Canada and Foreign: add $2 per year.)
Change Of Address: Please be sure to include both your old and new address and a mailing label from a recent issue.
Second class postage paid at Des Moines, Iowa.
Postmaster: Send change of address notice, Form 3579, to Woodsmith Publishing Co., 2200 Grand Ave., Des Moines, Iowa 50312.

BACK ISSUES

A list of the contents of all back issues appears on the wrapper of this issue. If the wrapper is missing, you can send for a booklet describing the contents and prices of all back issues.

SAMPLE COPIES

If you have a friend who would like to see a copy of **Woodsmith**, just send the name and address, and we'll send a sample (at no cost).

Sawdust

ABOUT THIS ISSUE. Two of the projects in this issue were kind of exciting to build. Not because of the projects themselves, but because of the joinery technique used to build them.

The joint we used is a dovetail tongue and groove — but not your typical dovetail tongue and groove.

The adjustable desk (shown on page 4) uses a *sliding* version of this joint in the legs. What fascinates me about this application is that the legs (and the joint) have to be sturdy enough to support the desk top, yet the joint also has to be flexible enough to slide up and down to change the height of the desk top.

We used another version of the dovetail tongue and groove on the in/out box (shown on page 12). This time a dovetail key took the place of the dovetail tongue. And once again, it had to serve two purposes. The key was, in part, a decorative banding strip, but it also served as a corner joint to hold the trays together.

It's not often a joint has to be so versatile — but it was fun to "put it through its paces" for the projects in this issue.

INDEX. You may notice that this issue is a little thicker than usual. That's because we've included a special four-page index to all the articles, projects, and information shown in the first 30 issues of *Woodsmith*. I hope it makes finding information in the back issues a little easier.

ENVELOPE. We've also inserted an envelope in this issue. Feel free to use it to renew your subscription, order a gift subscription for a friend, or order back issues.

But the most important reason for including this envelope is to provide an easy way to let us know of any problems you may have with your subscription.

If you haven't received an issue, or if it's torn or damaged, or if your name is misspelled on the label, or if you've changed your address . . . if there's any problem at all, please let us know. We want to provide the best service we can. If there's a problem, just let us know and we'll fix it.

NEW FACES. Ann Williams has just joined the *Woodsmith* group to help with all of the problems I just mentioned. If you happen to call us, Ann's voice is probably the first one you'll hear.

PUBLISHER'S STATEMENT. Every year in the January/February issue of *Woodsmith* we're required by the Post Office to print the Publisher's Statement shown below. Last year this statement showed our circulation at about 74,000. This year we've grown a bit — to over 151,000.

Although numbers are nice, I always try to keep in mind what they really mean. When I'm working on a project or article for *Woodsmith*, I like to think that I'm working for 150,000 friends who enjoy woodworking. That's the only way I can make any sense out of the numbers that seem to grow so fast.

NEXT MAILING. Along with the growth, we've also experienced some growing pains. We are doing our best to get back on a more timely schedule for mailing out the issues. The next issue (*Woodsmith* No. 32) will be in the mail during the week of April 10th. (Since it's mailed second class postage, please allow two weeks for delivery.) Again, thank you for your patience.

STATEMENT OF OWNERSHIP, MANAGEMENT AND CIRCULATION

(Required by 39 U.S.C. 3685)

1. Title of Publication: Woodsmith. 1a. Publication No.: 01644114. 2. Date of Filing: October 1, 1983. 3. Frequency of issue: Bimonthly. 3a. No. of issues annually: six (6). 3b. Annual subscription price: $10.00. 4. Complete mailing address of known office of publication: 2200 Grand Avenue, Des Moines, (Polk County), Iowa 50312. 5. Complete mailing address of the headquarters of general business offices of the publisher: 2200 Grand Avenue, Des Moines, Iowa 50312. 6. Complete address of publisher, editor, and managing editor: Publisher: Donald B. Peschke, 2200 Grand Avenue, Des Moines, Iowa 50312, Editor: (same as publisher), Managing Editor (none). 7. Owner: Woodsmith Publishing Co., 2200 Grand Avenue, Des Moines, Iowa 50312; Donald B. Peschke, 2200 Grand Avenue, Des Moines, Iowa 50312; Theodore M. Kralicek, 2200 Grand Avenue, Des Moines, Iowa 50312. 8. Known bondholders, mortgagees, and other security holders owning 1 percent or more of total amount of bond, mortgages or other securities: None. 9. (does not apply) 10. Extent and nature of circulation:

	Average no. copies each issue during preceding 12 months	Actual no. copies of single issue published nearest to filing date (Sept., 1983)
A. Total no. copies printed (net press run)	129,540	170,185
B. Paid Circulation		
1. Sales through dealers and carriers, street vendors and counter sales	2,531	3,193
2. Mail subscriptions	118,056	147,845
C. Total paid circulation (Sum of 10B1 and 10B2)	120,587	151,038
D. Free distribution by mail, carrier or other means samples, complimentary, and other free copies	55	61
E. Total distribution (Sum of C and D)	120,642	151,099
F. Copies not distributed		
1. Office use, left over, unaccounted, spoiled after printing	8,794	18,994
2. Returns from news agents	104	92
G. Total (Sum of E, F1 and F2)	129,540	170,185

11. I certify that the statements made by me above are correct and complete. (signed) Donald B. Peschke, Publisher/Editor

Tips & Techniques

CUTTING RADIAL ARM DENTIL

After reading how to cut dentil (using the table saw) for the Curio Cabinet in *Woodsmith* No. 26, I decided to come up with a method that would also work on my radial arm saw.

Using my method, the first step is to attach a fence to the saw that's slightly higher than the thickness of the dentil itself. Then make a shallow cut through the fence with a dado blade set to cut a ¼" kerf. Finally, mark a point on the fence ½" to the

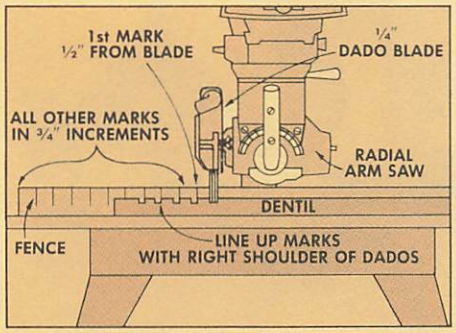

left of the dado, and additional marks in ¾" increments for 4 or 5 inches along the length of the fence.

After adjusting the depth of cut on a scrap piece, make the first cut on the workpiece. Then line up the *right* shoulder of the dado with the first line, and make the second dado cut.

Each successive cut is made by simply lining up the right shoulder of each dado with the penciled marks on the fence as shown. Because "lining up" the cuts with the marks is an eye-ball procedure, it works best if you line up as many lines as possible for each cut.

Steve Crampton
Wheat Ridge, Colorado

DISC SANDERS FOR SHARPENING TOOLS

I've been reading the *Woodsmith* back issues, and came across your article on sharpening in *Woodsmith* No. 20. But I was disappointed because the article didn't mention my favorite method of sharpening: using a vertical 8" disc sander freehand (with no tool rest).

One thing that makes this method work so well is that you can sight down the face of the plate to assure that the bevel is in constant contact with the disc. And I've been particularly pleased with the results achieved when using this method for sharpening lathe tools.

Edward Rosenfeld
Gurley, Alabama

REVISED ROUTER TABLE

I changed the material used for the top surface of your router table — it may be of some help to your readers. I used ¾" cabinet grade 7-ply exterior plywood that has two extremely thin layers of plastic adhered on both faces.

This material is commonly known as MDO (Medium Density Overlay). Using this material saved me the time and trouble of bonding a separate piece of Masonite to the surface. And since the color of the surface is fairly light, penciled stop lines really stand out.

Bob Francis
Mineola, Texas

GLUING DEEP CABINETS

As I was building the Tambour Stereo Cabinet in *Woodsmith* No. 17, everything was going according to plan until I dry clamped the case together to spot any problems (before it's too late).

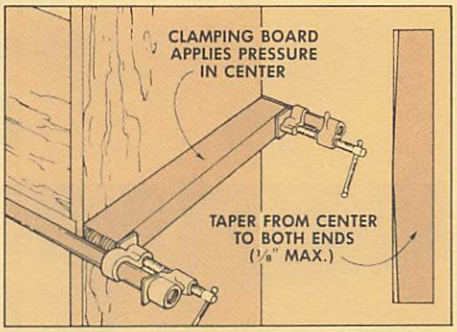

As in the past, I found that simply positioning clamps on the front and back edges of the cabinet sides won't pull the center of the cabinet sides tight against the shelf (or web frame). This seems to be a problem every time I use plywood for cabinet construction.

The best method I've found to keep the center of the panel snug against the shelves is to use a clamping board that has a convex edge. By positioning the convex face against the side of the cabinet (directly across from the shelf), and clamping only the ends of the board, constant pressure can be applied against the center of the cabinet side.

Chris Stuart
Manteca, California

DOVETAIL GAUGE

I've always had a hard time trying to use a ruler to set the height of a blade on the table saw, or the height of a bit on the router table. It seems that no matter how careful I am, the height is never quite right.

I think I've finally come up with the answer to my problem. I designed a quick and easy jig that uses a sliding dovetail joint. To use the jig, the floating block is positioned on top of the blade (or bit) so it can ride up and down the base as the depth of cut is adjusted.

The key to this system is to be sure that the block is free floating, so it will adjust to even the slightest change in the position of the blade.

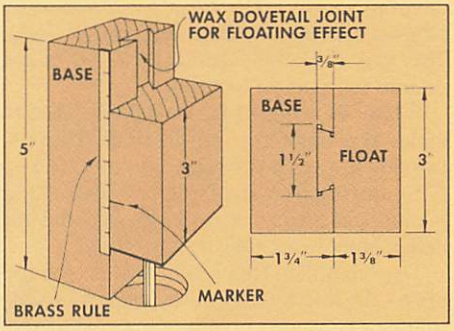

To make the jig slide easily, I used the Bosch ½" dovetail glue joint bit (see Sources on page 24). This bit is a little different than a normal dovetail bit — it produces squared off corners on the dovetail. This squared corner keeps the two halves from catching as they slide back and forth. And with the addition of a good coat of wax, the sliding block will truly "float."

To keep the sharp edges on the top edge of the carbide-tipped router bits from cutting into the sliding block, I glued a small piece of plastic laminate (Formica) to the bottom face of the block.

To calibrate the jig, I rabbeted the edge of the base and attached a brass scale off an old wooden folding rule. I also positioned the rule 1" above the bottom edge of the base to make it easier to read. Then mark a pointer on the sliding block so that it corresponds with the exact height settings on the brass scale.

Kenneth Gyldenvand
Des Moines, Iowa

SEND IN YOUR IDEAS

If you'd like to share a woodworking tip with other readers of *Woodsmith*, send your idea to: *Woodsmith*, Tips & Techniques, 2200 Grand Ave., Des Moines, Iowa 50312.

We pay a minimum of $10 for tips, and $15 or more for special techniques (that are accepted for publication). Please give a complete explanation of your idea. If a sketch is needed, send it along; we'll draw a new one.

Adjustable Desk

A DESK FOR ALL SIZES

Most of the time when we set out to build a piece of furniture, we try to build it to a standard size. Tables and desks, for example, are supposed to be 29″ high. But the problem with standard-size furniture is that people don't come in standard sizes — especially kids.

We wanted to build a desk that would "grow" as the person grew. The solution was to make the height of the desk adjustable. To do this, we decided to use a sliding dovetail joint on the desk's leg assembly (shown in the detail photo, below left). This way the whole desktop can be raised to suit the person using it.

While we were at it, we also decided to make the desk top adjustable. That is, provide a way so the top could be tilted up for coloring (or drafting woodworking plans), but also so it could be laid flat for doing homework (or paying bills).

To accomplish this requirement, the top of the desk is hinged on a "rachet" frame that can be raised in increments (shown in the detail photo, below right).

It became quite a design challenge to get these two adjustable features to work, and not interfere with each other. But once the design was worked out, the fun of building the desk could begin. I started with the desk top assembly. This consists of a web frame that supports the solid oak end caps, the tilting desk top, and the drawers.

THE WEB FRAME

The key to this whole desk top assembly is the center web frame. All the other parts are attached to it. I built the web frame by cutting two long rails (A) and four stiles (B) to size, see Fig. 1. First, cut the rails to a length of 48¾″ and the stiles to a length of 17¾″. Then rip all six of these pieces to a common width of 2¼″.

JOINERY. These six pieces are joined with stub tenons and grooves, see Detail in Fig. 1. To make these joints, cut a ¼″-wide by ⅜″-deep groove centered on the inside edge of each piece. Then cut stub tenons on the ends of the four stiles to fit the grooves. (For more information on this type of joinery, see *Woodsmith* No. 29.)

PANELS. Next, ¼″ Masonite panels are added to the outside two openings in the web frame. (These outside panels cover the areas above the drawers. The middle opening does not have a panel because it has to be open to allow space for the "rachet" frame used to tilt the desk top up.)

To get the measurements for the two panels, dry-assemble the frame so the two inside stiles are 10⅞″ from the outside stiles, see Fig. 2. (This should leave an 18″ opening between the two inside stiles.) Then cut ¼″ Masonite panels to fit the groove-to-groove measurements in the frame.

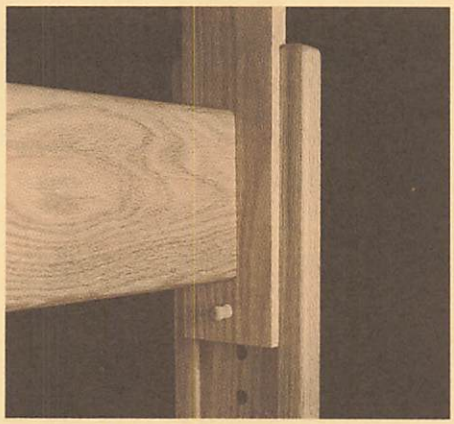

After these panels are cut, glue and clamp the frame together (gluing the panels in the frame openings).

END CAPS AND APRONS

The basic desk top is formed by adding solid oak caps to the ends of the web frame, and aprons along the front and back edges, refer to Fig. 4.

END CAPS. The two end caps (J) are cut from 5/4 stock (1 1/16″-thick) so they're 24¾″ long and 5⅜″ wide. Then two ¼″-wide grooves are routed on the inside face of these caps so they can be joined to the web frame.

ROUT GROOVES. To rout the first groove, clamp on a fence to guide the router to cut a groove 1⅞″ from the top edge of the cap, see Fig. 3. (Note: This groove is positioned to allow for the thickness of the web frame plus the thickness of the desk top, which is added later.)

Mark the start and stop points for this groove 1½″ from the front and back edges of the cap. (The distance between these

two marks should equal the width of the web frame, plus ¼".) Then plunge the router in at the start point and rout to the stop mark.

The second groove on the end caps starts at the bottom edge of the cap and stops in the horizontal groove. However, to ensure the grooves on both caps are in exactly the same position, I clamped the caps together (bottom edge to bottom edge) and routed one groove across both pieces. Again, use a fence to guide the router, see Fig. 3.

FRONT AND BACK APRONS

After the grooves are routed on the end caps, the front and back aprons (C and D) are cut to size. The width of the back apron is 4", and the width of the front apron is 1½". Both aprons are cut to length to equal the length of the web frame.

ROUT GROOVES. To attach the aprons to the web frame, a ¼"-wide groove is routed on the inside face of each apron. This groove is positioned so the distance to the bottom edge of the groove is equal to the thickness of the web frame, see Fig. 5. (If the groove is in this position, the top of the web frame will be flush with the top edge of the apron when these pieces are assembled.)

ROUT TONGUES

After the grooves are cut in the end caps and the aprons, rabbets are cut on all four edges of the web frame. These rabbets actually produce tongues to fit the grooves in the caps and aprons, see Fig. 6. I used a router (hand-held) with a rabbeting bit and pilot to rout these rabbets.

It's best to sneak up on the depth of cut of the rabbets. With each successively deeper pass, check the fit of the tongues in the grooves. They should fit snugly.

TONGUES ON APRON. Next, set up the router table to rout rabbets on the ends of the back apron (D). Again, the rabbets are cut to form tongues to fit the vertical grooves in the ends cap, see Fig. 6.

After the tongues are cut, they have to be trimmed to fit the height of the vertical groove. Simply trim off the top section of the tongue above the groove, see Steps 2 and 3 in Fig. 6.

TRIM FRONT APRON TO LENGTH. The front apron (C) does not have tongues on the ends. Instead, it's trimmed to final length to match the shoulder-to-shoulder length of the web frame, refer to Fig. 4.

ASSEMBLY

When all the tongues fit the grooves, round the four corners of the end caps to a ⅜" radius. (I did this on a disk sander.) Then round over the outside edges of the end caps with a ¼" rounding-over bit.

ASSEMBLY. Finally, the end caps and aprons can be glued and clamped to the edges of the web frame.

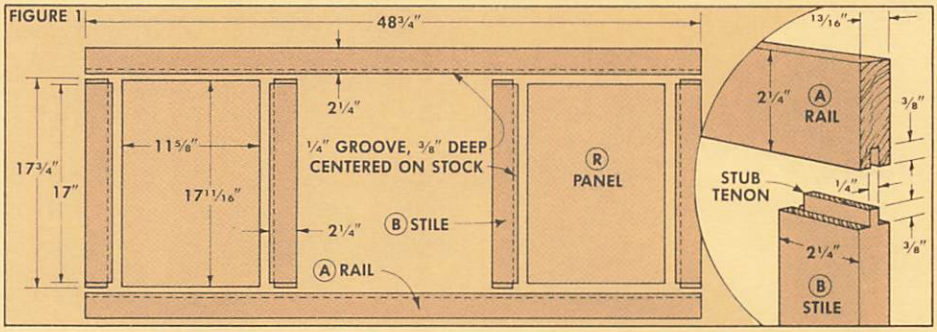

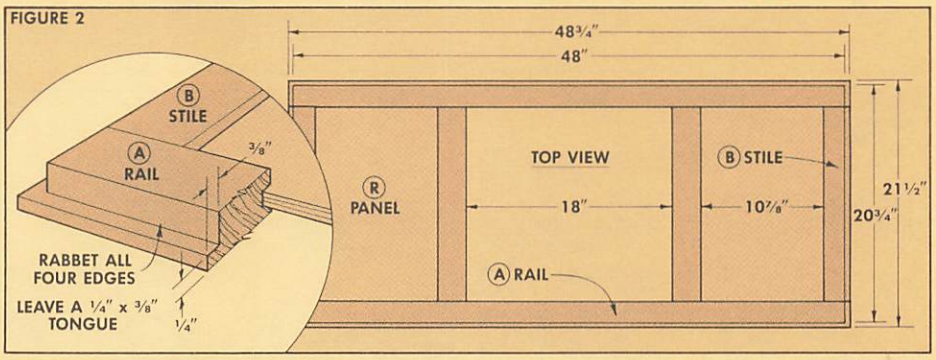

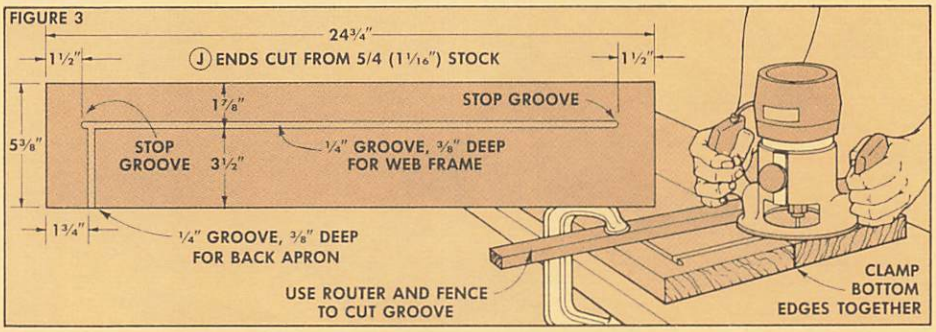

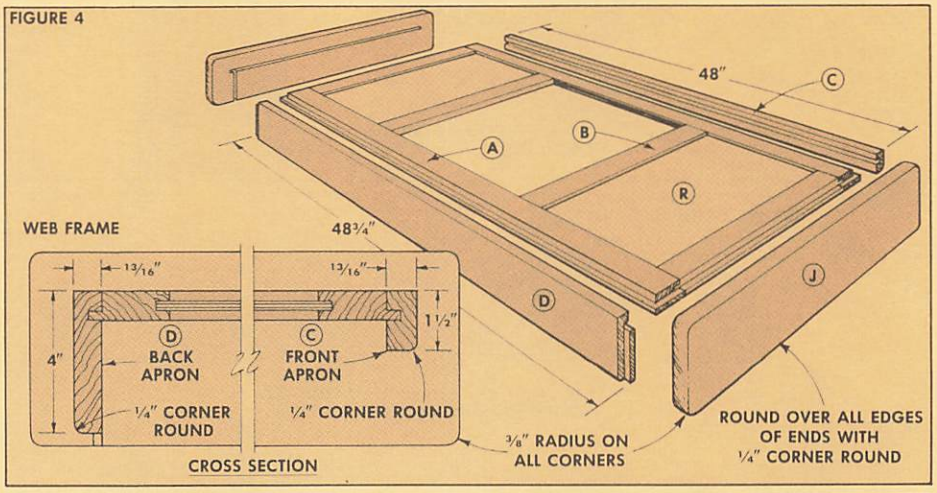

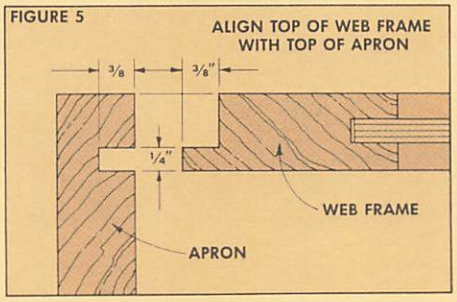

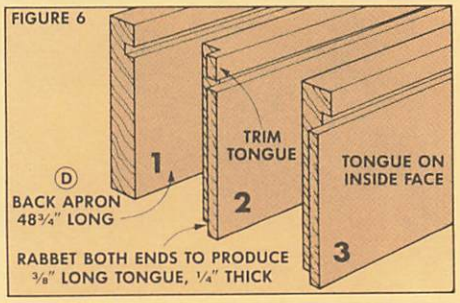

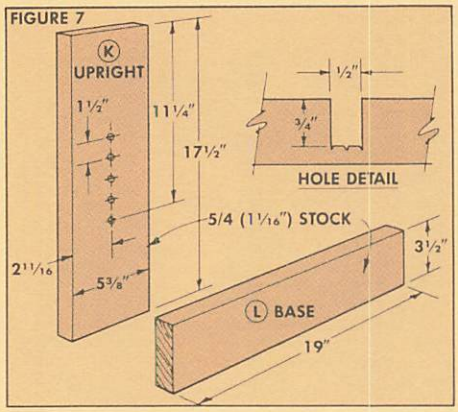

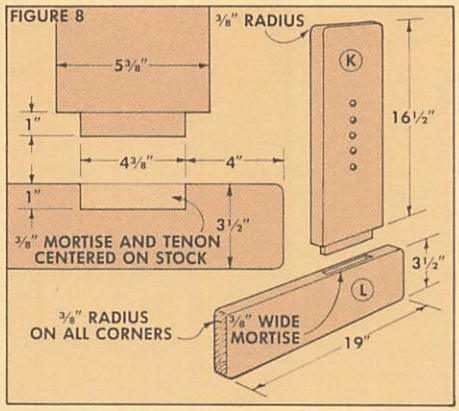

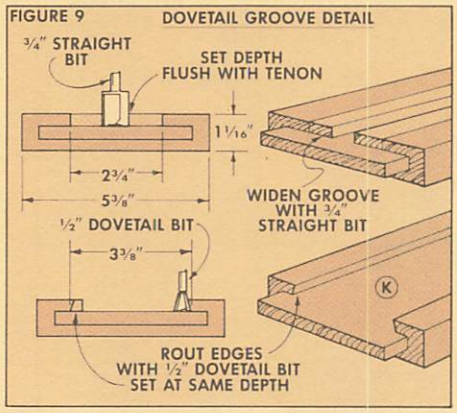

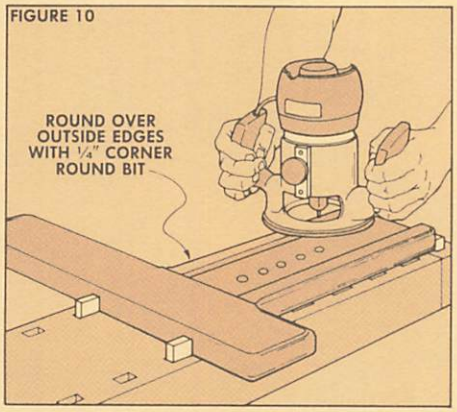

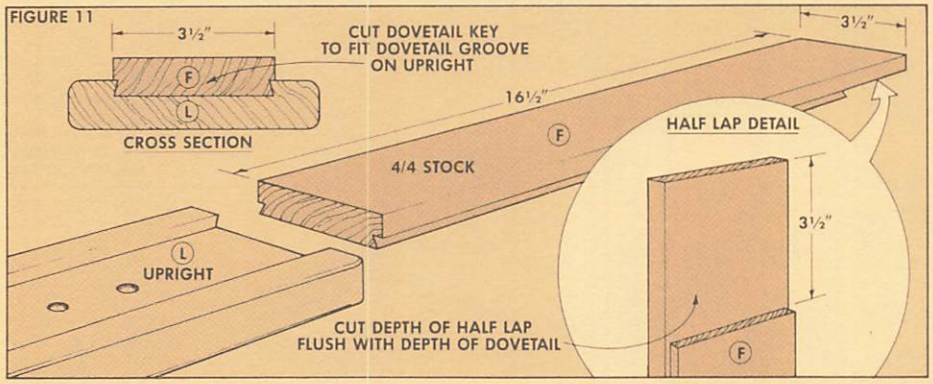

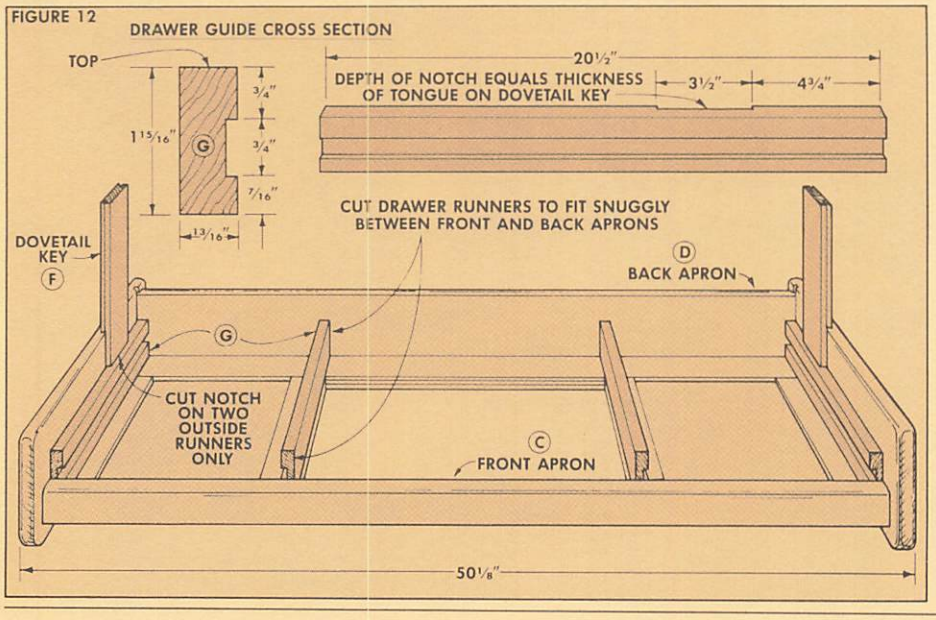

THE TRESTLE LEG ASSEMBLY

The desk top is mounted to a trestle leg assembly which can be adjusted in height by means of a sliding dovetail.

UPRIGHT AND BASE. To build the legs, I started with the uprights (K) and the bases (L), see Fig. 7. Cut the uprights to size and locate the position for the dowel holes. (Later, pegs are inserted in these holes as stops to hold the desk at the height you want.) Drill the ½" dowel holes ¾" deep, spacing them 1½" apart, as shown in Fig. 7. (It's best to use a Forstner bit to drill flat-bottomed holes.)

JOINERY. To join the upright to the base, cut a mortise in the base, see Detail in Fig. 8, and then cut a matching tenon on the end of the upright.

DOVETAIL GROOVE. Before joining the upright and base together, a wide dovetail groove is routed on the inside face of the upright. (This groove will hold the sliding dovetail key.)

I routed this groove on the router table, starting with a ¾" straight bit to clear out most of the waste, see Fig. 9. Set the fence on the router table to cut a groove *centered* on the width of the upright. The bottom (depth) of this groove should be flush with the face of the tenon.

Move the fence and make passes on both sides of the center groove, until it's 2¾" wide. Then switch to a ½" dovetail bit to rout the half-dovetail profile on the outside edges so the final width (from point to point) is 3⅜".

ROUND EDGES. After the dovetail groove is routed, glue and clamp the upright and base together. Then cut a ⅜" radius on all corners, and round over the edges with a ¼" rounding-over bit, see Fig. 10.

DOVETAIL KEY. Next, a large sliding dovetail key (F) is cut to fit the dovetail groove in the upright. Cut this key ⅛" wider than the widest dimension of the groove. Then rout the half-dovetail profile on both edges of the key, sneaking up on these cuts until the key slides smoothly in the groove, see Fig. 11.

The top end of this key is attached to the end caps on the desk top assembly. To do this, cut a half-lap to the depth of the dovetail at the top of the key. After it's cut, the shoulder of the half lap should rest firmly on the bottom edge of the end cap, and the top end should butt against the bottom of the web frame, refer to Figs. 12 and 13.

DRAWER RUNNERS

Before attaching the leg assemblies to the desk top, the drawer runners (G) have to be cut. These runners serve two purposes: they support and guide the drawers, and the two outside runners also support the dovetail key.

This was the biggest design problem we

had with this desk. The large dovetail keys (that ride in the uprights) had to support the entire desk top assembly. Since the weight of the desk top is not centered on the legs, there is bound to be an undue amount of racking pressure. To solve this problem, we built the drawer runners around the keys to support them and prevent racking.

DRAWER RUNNERS. The drawer runners are cut 1 5/16" wide and long enough to fit tight between the front and back apron, see Fig. 12. Then 3/4"-wide grooves are cut 7/16" from the bottom edge of each runner. (These grooves will interlock with grooves on the drawer sides.)

After all four runners are cut, the two outside runners also have wide notches cut in them to mate with the half lap on the dovetail key, see Fig. 13. (I cut these notches on the table saw, making multiple passes to clean out the waste.) Then screw the outside two drawer runners to the end caps, countersinking and screwing through the grooves, see Fig. 13.

ASSEMBLY. To mount the dovetail key, drill two 3/8" counterbores 1/8" deep in the half-lap at the top of the key. Then drill 3/16" pilot holes through the remainder of the key for pan-head screws, see Fig. 13.

Mount the dovetail key in the notch in the runners and mark the position of the two pilot holes in the end cap. Remove the key and drill 3/8" holes, 5/8" deep in the end cap for threaded inserts. (Threaded inserts are used here so the keys can be mounted and removed to complete the construction of the trestle leg assembly.)

To mount the two inside runners, drill countersink holes through the top of the web frame and into the runners, then screw the runners in place, see Fig. 14.

TRESTLE ASSEMBLY

To complete the trestle leg assembly, a stretcher (E) is added between the two sliding dovetail keys. Measure the distance between the keys to get the length of the stretcher. (Make sure the keys are exactly perpendicular when this measurement is taken.) Then add 1 1/4" to this measurement to allow for the two 5/8"-long tenons on each end of the stretcher.

JOINERY. Cut the stretcher to length and width. Then cut 5/8"-deep slot mortises in the keys, and cut matching tenons on the ends of the stretcher, see Fig. 16.

Also, drill a 1/2" hole in the dovetail key for the peg that's used to adjust the height of the desk. (To make this peg, I chucked a 1/2" dowel in the drill press and used a file to "carve" a knob on the end of the peg, see Detail in Fig. 16.)

ASSEMBLY. Finally, mount the stretcher between the dovetail keys to make sure it's the right length (so the legs don't splay in or out). If this checks out, glue and clamp the stretcher into the mortises in the keys.

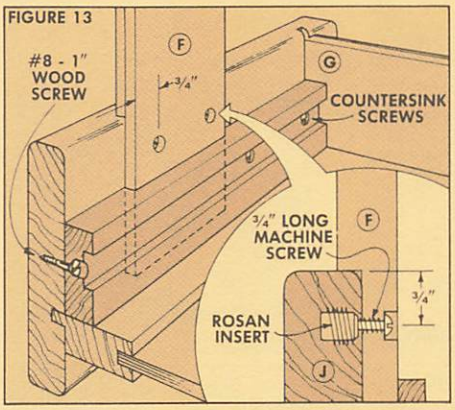

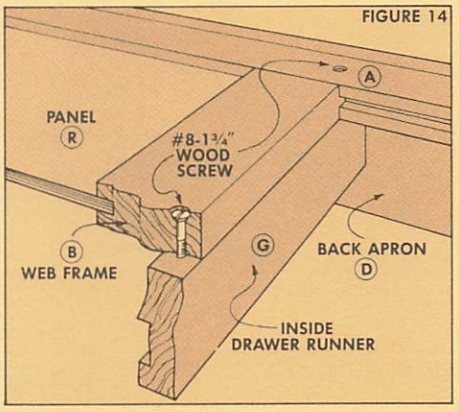

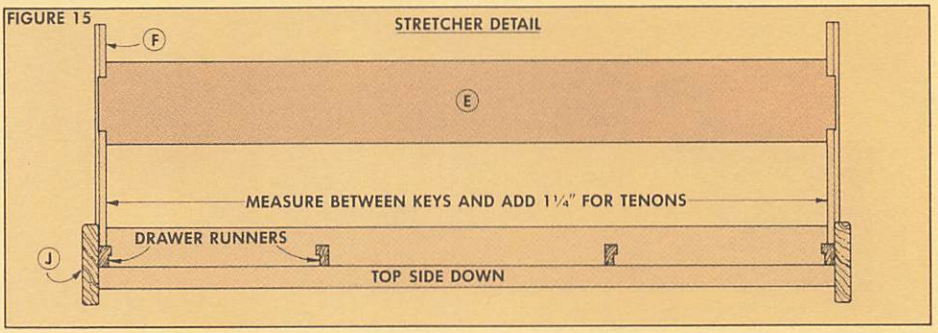

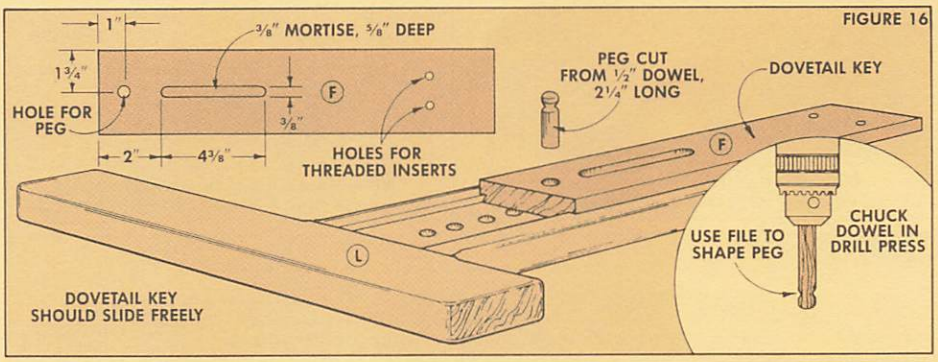

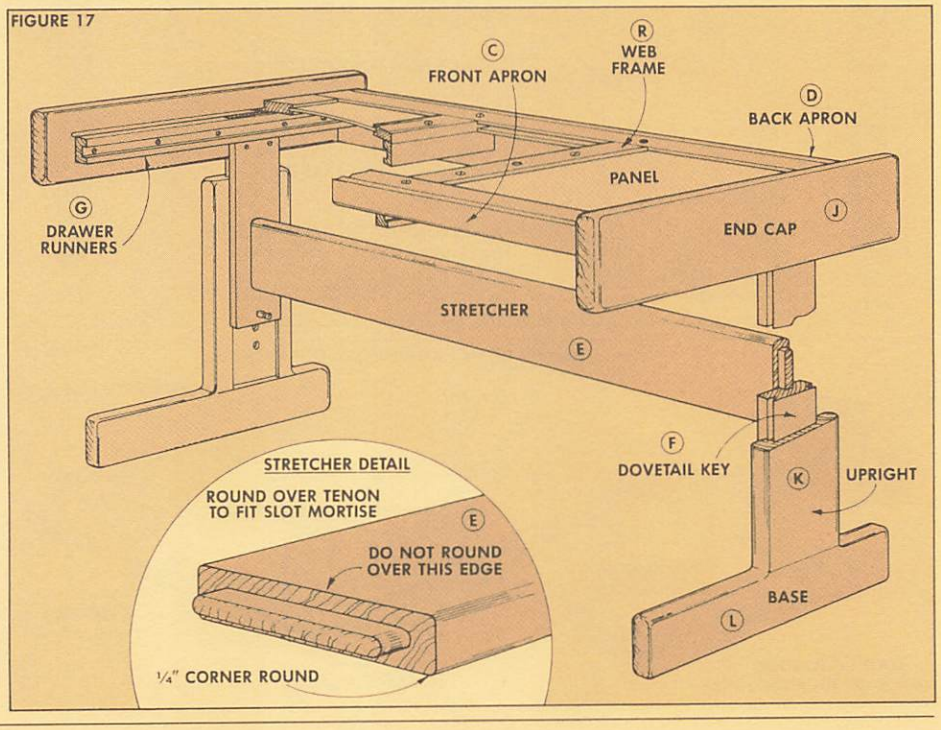

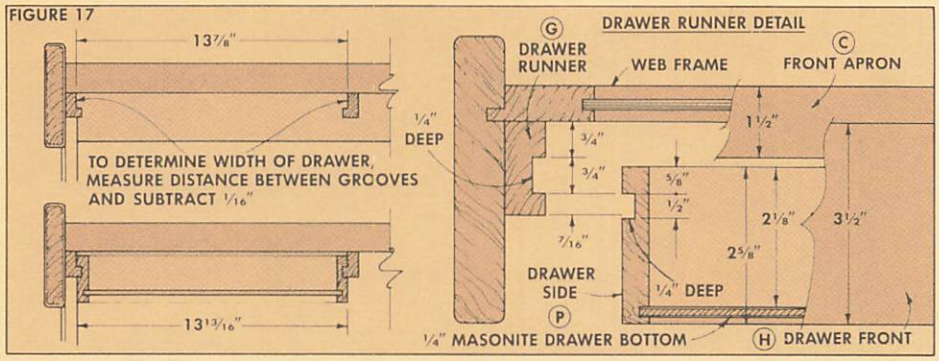

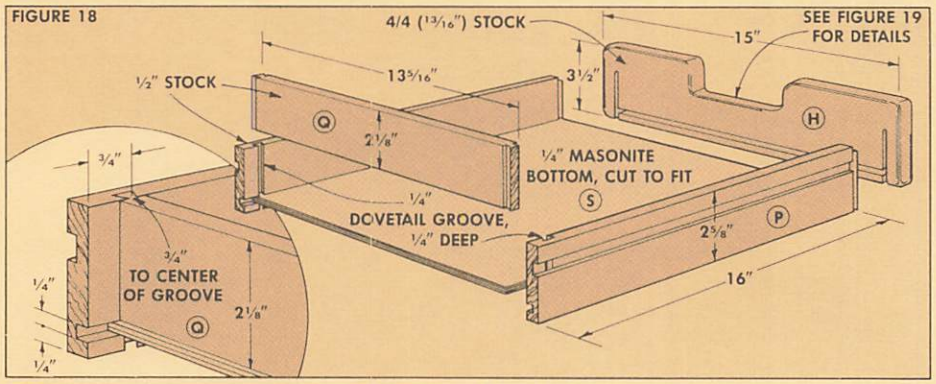

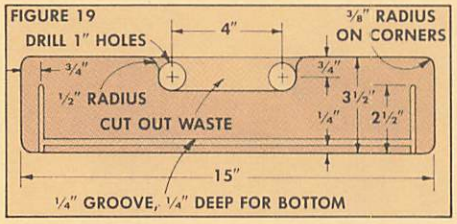

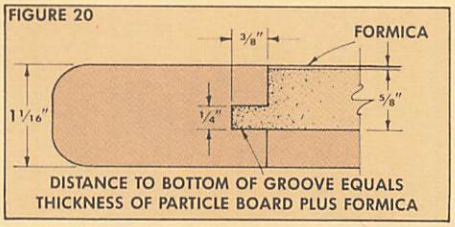

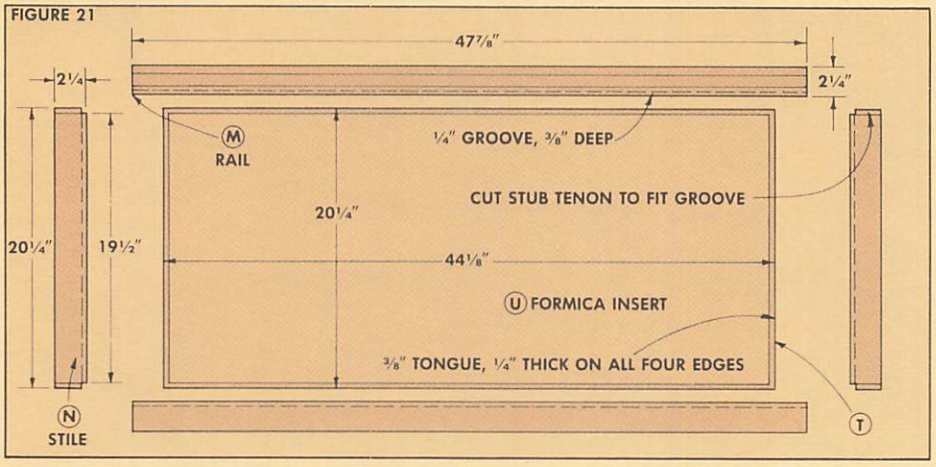

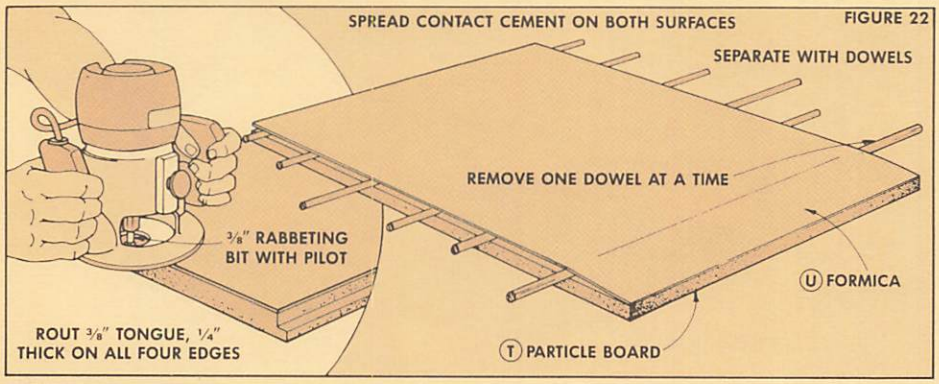

THE DRAWERS

At this point the desk is almost complete. All that's needed are the drawers and the desk top. I started with the drawers.

DRAWER FRONT. To get the measurements for the drawer front (H), measure the distance between the *outside* edges of the runners, see Fig. 17. Then cut the drawer front to this length, and to a width of 3½".

DRAWER SIDES. I used dovetail tongue and groove joints to assemble the drawer sides (P) and back (Q). (A detailed description of this type of joinery is given on pages 20 to 22.)

To do this, cut stopped dovetail grooves on the inside face of the drawer fronts to attach the drawer sides. The dovetail grooves are positioned so when the drawer sides are attached, the distance between the *outside* faces of the drawer sides is 1/16" less than the distance between the bottoms of the grooves on the drawer runners, see Fig. 17.

After the dovetail grooves are cut on the drawer front, cut the drawer sides to size. Then cut ½" grooves on the outside faces of the drawer sides to mate with the tongues on the runners, see Fig. 17.

BACK AND BOTTOM. After the sides are cut, join the back between them with dovetail tongue and groove joints, and cut the Masonite bottom to size, see Fig. 18.

DRAWER HANDLE. Before assembling the drawers, I made a notched "handle" on the drawer fronts, see Fig. 19. Cut out the notch and smooth the edges with a sanding drum on the drill press. Then cut a ⅜" radius on the four corners of the drawer front, and round over all the edges with a ¼" rounding over bit.

ASSEMBLY. Now the drawers can be assembled and mounted to the runners.

THE DESK TOP

After the drawers are installed, the desk top is built. The top consists of a particle board panel with Formica laminated to it, and an oak frame around the edges.

FRAME. I started by building the 5/4 oak frame. The rails (M) and stiles (N) for this frame are ripped to a width of 2¼", see Fig. 21. As for the length of these pieces, they're cut to fit the desk top assembly. (This assembly consists of the web frame, end caps, and aprons, refer to Fig. 17.)

The top frame's rails (M) are cut to length so they're ⅛" *less* than the distance between the end caps (J). Then the stiles (N) are cut to length so when the frame is assembled the size from front to back is 1½" *larger* than the web frame and aprons, see Fig. 21.

FORMICA PANEL. Before cutting the joints to assemble this frame, I made the Formica panel insert. To do this, laminate a piece of Formica (I used dark henna,

#935) to a piece of ⅝" particle board that's cut to a rough size of 21" x 45".

Apply a coat of contact cement to both the Formica and the particle board. When the cement is dry to the touch, lay dowel rods over the particle board and put the Formica on top of the dowels, see Fig. 22. Then slowly pull the dowels out, and press the Formica in place.

GROOVES. This laminated panel is used to locate the position of the ¼"-wide by ⅜"-deep grooves on the inside edges of the four frame members. The bottom edges of these grooves should align with the bottom of the particle board panel, see Fig. 20.

After the grooves are cut, cut stub tenons on the ends of the stiles (N) to fit tight in the grooves, see Fig. 21.

TONGUES. Dry-assemble the frame members to get the measurements for the panel, and cut the panel to this final size.

Next, rout rabbets on the edges of the Formica panel to create tongues that fit tight in the grooves, see Fig. 22. (Sneak up on the depth of these rabbets so the tongues fit snugly in the grooves.)

ASSEMBLY. Before final assembly of the frame, I routed a pencil groove on the face of the back rail of the frame, see Fig. 23. Then glue and clamp the frame members to the edges of the panel.

After the desk top frame is assembled, it's mounted to the web frame with 1½" hinges, see Fig. 24. Position the front edge of the desk top so it's flush with the fronts of the drawers, refer to Fig. 27. Then rout out mortises for the hinges in the web frame. (These mortises should be as deep as the total thickness of the hinges so the top frame rests flat on the web frame.)

RACHET ASSEMBLY

The last step is to make the rachet assembly that's used to tilt the desk top up. This frame consists of two notched arms (O) that fit over dowel pegs, see Fig. 26.

Cut the arms from one piece of 5/4 stock, see Fig. 25. Drill ½" holes along the edge, band saw out the notches, and resaw this piece to get the two arms. Then join the arms at the bottom with a ½" dowel rod, and a crosspiece (I) half-lapped at the top, see Fig. 26.

Then the rachet frame is hinged to the bottom side of the desk top and ½" dowel pegs are mounted to the inside drawer runners, see Fig. 27.

FINAL STEPS

To complete the desk, I added a "pencil catcher" to the front edge of the desk top so pencils or paper don't slide off when the desk top is tilted up, see Fig. 29. Also, I added adjustable pads to the base of the leg assemblies, see Fig. 28.

The last step was to finish all the wood parts of the desk with Sutherland Welles Tung Oil.

FIGURE 23

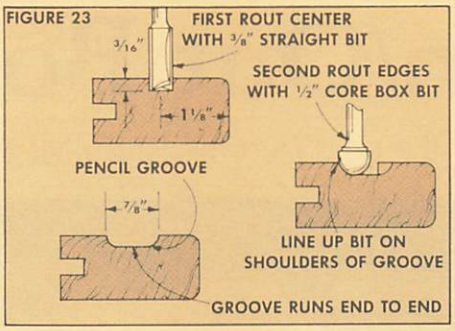

FIGURE 24

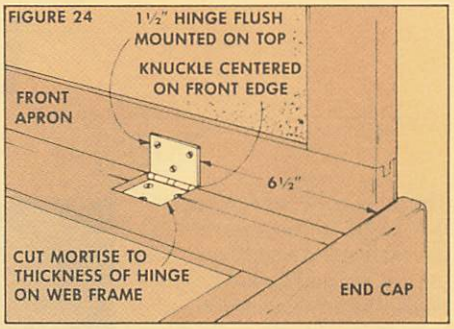

FIGURE 25

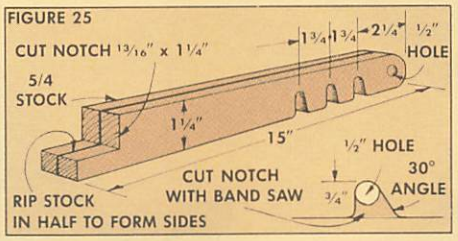

FIGURE 26

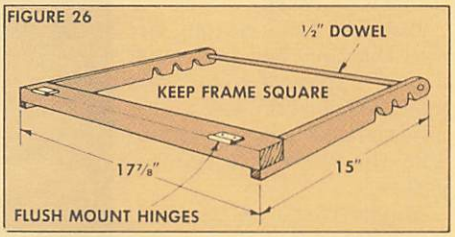

FIGURE 27

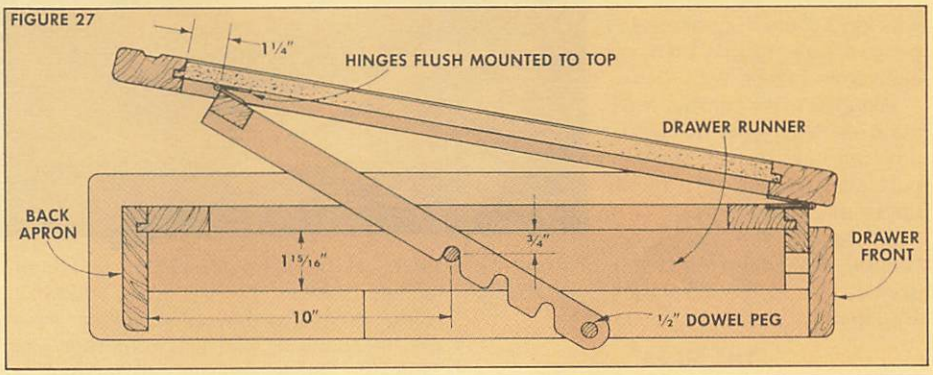

FIGURE 28

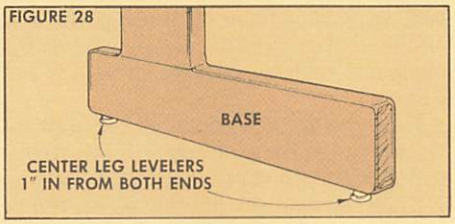

FIGURE 29

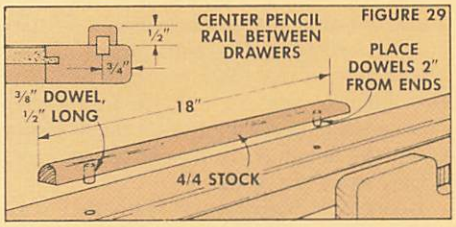

MATERIALS LIST

Overall Dimension 50⅛"w x 24¾"d x 26"-34"h		
A	Web Frame Rails (2)	13/16 x 2¼ - 48¾
B	Web Frame Stiles (2)	13/16 x 2¼ - 17¾
C	Front Apron (1)	13/16 x 1½ - 48
D	Back Apron (1)	13/16 x 4 - 48¾
E	Stretcher (1)	13/16 x 5⅜ - 48 5/16
F	Dovetail Key (2)	13/16 x 3½ - 16½
G	Drawer Runners (4)	13/16 x 1 15/16 - 20¾
H	Drawer Fronts (2)	13/16 x 3½ - 15
I	Ratchet Frame Top (1)	13/16 x 1¼ - 17⅞
J	End Caps (2)	1 1/16 x 5⅜ - 24¾
K	Uprights (2)	1 1/16 x 5⅜ - 17½
L	Base (2)	1 1/16 x 3½ - 19
M	Top Frame Rails (2)	1 1/16 x 2¼ - 47⅞
N	Top Frame Stiles (2)	1 1/16 x 2¼ - 20¼
O	Ratchet Frame Arms	1 1/16 x 1¼ - 15
P	Drawer Sides (4)	½ x 2⅝ - 16
Q	Drawer Backs (2)	½ x 2⅛ - 13 5/16
R	Web Frame Panels	¼" Masonite
S	Drawer Bottoms (2)	¼" Masonite
T	Top Frame Panel	⅝ x 20¼ - 44⅛
U	Formica	20¼ x 44⅛

CUTTING DIAGRAM

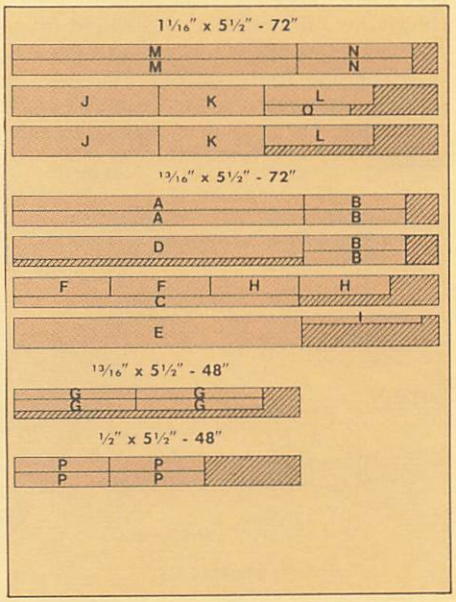

In/Out Box

THE INS AND OUTS OF SLIDING DOVETAILS

There's an old-time joint that's not used much anymore: a dovetail groove and key. This joint was used to hold several boards together, edge-to-edge (as on a table top).

But Ted Kralicek (our Design Director) has discovered a new application for this joint. The dovetail key can be used to make a *corner* joint to hold the sides of a box together.

Maybe that's no big deal, but building this in/out box was kind of exciting because I got to use a joint that I'd never even seen before.

We also used another variation on this joint (a *sliding* dovetail key) to hold the support arm on the sides of the upper and lower trays.

All in all, this in/out box turned out to be quite an interesting project . . . at least from a woodworking standpoint.

THE SIDES

I started this project by cutting ½" oak stock to size for the side pieces. These pieces are cut to a final length of 13¼" and to width so they're a little more than double wide, see Fig. 1. (It's much easier to cut the dovetail grooves on these pieces if they start out wider.)

DOVETAIL GROOVES. The dovetail grooves that hold the support arms in the tray's side pieces are routed first. I used the router table with a ¾" straight bit to clean out most of the waste in this groove.

Adjust the router table's fence so the straight bit is *centered* on the length of the side. Then rout a 3/16" deep dado across the entire width of the side piece, see Detail 1 in Fig. 1. After the first pass, widen this center groove by moving the fence toward the bit about ½" and make another pass. Then flip the workpiece end for end and rout an equal amount off the opposite side of the center groove. Keep moving the fence and routing until the groove is 1¾" wide.

Next, install a ½" dovetail bit (also set 3/16" deep) and rout the edges of the groove to its final width of 2¼", see Detail 2 in Fig. 1. Then the double wide side pieces can be ripped in half — to a final width of 2⅜".

SUPPORT ARMS

Next, the support arms are cut 6½" long and ⅛" wider than the widest part of the dovetail groove in the side pieces, see Fig. 2. Then, with the dovetail bit at the same depth of cut as on the grooves, rout the half-dovetail profile on the edges of the support arms by making shallow passes on both edges, see Fig. 2. Sneak up on these cuts and test the fit until the support arm slides smoothly — but not too loosely — in the groove.

PEG SUPPORTS. To complete the support arms, round over the outside edges. And finally, to keep the top tray in position (refer to Fig. 8), mount pegs centered 2⅝" from the top of the support arms, see Fig. 2.

FRONT/BACK

Next, I worked on the front and back pieces. This is where a dovetail key is used to make a corner joint.

ROUT GROOVES. To make this joint, the first step is to rout dovetail grooves on the face of the front and back pieces. However, since dovetail bits can not be raised in increments to rout a groove, I started with a ¼" straight bit to clean out most of the waste, see Fig. 3.

For the first pass, set the fence to cut a ¼"-wide groove *centered* ⅝" from the edge. For this cut, the straight bit's depth should be slightly less than the finished depth of groove so the final pass with the dovetail bit will create a really clean cut.

After the straight groove is routed on one edge, turn the piece end-for-end and rout a second straight groove on the opposite edge.

Then convert the two straight grooves into dovetail grooves. Leave the router table's fence in the same position, and install a ½" dovetail bit set for a 5/16" depth of

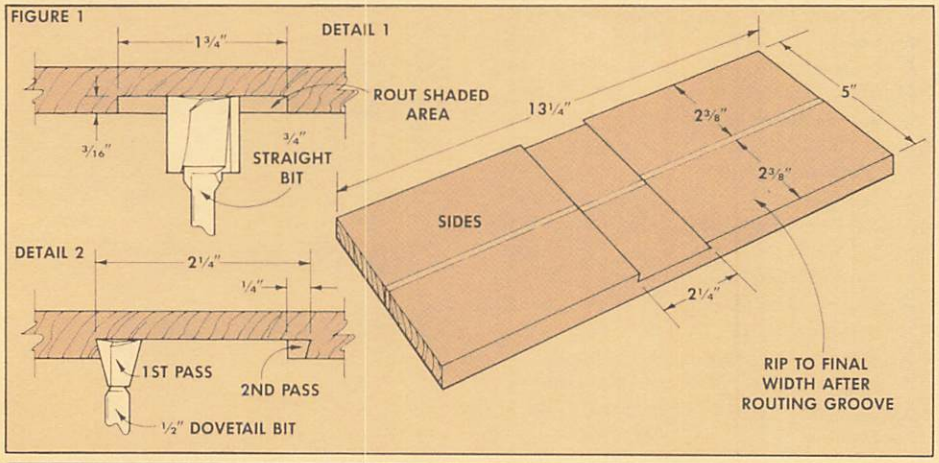

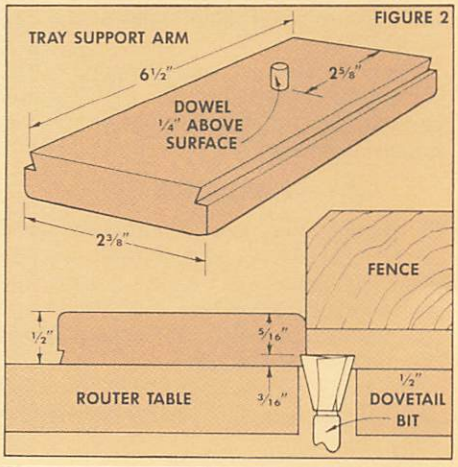

cut, and rout the dovetail profile on both grooves.

DOVETAIL SOCKETS. With this same setup on the router table, rout the sockets in the ends of the side pieces, see Fig. 4. To support the side pieces and prevent chip out while they're on end, use a scrap 2x4 block behind the workpiece.

DOVETAIL KEYS

Now the dovetail keys are cut to fit the grooves in the front/back pieces. The keys are made by routing dovetail tongues on two strips that start out 3" wide and 1½" longer than the length of the front/back pieces. (This extra length is to form the "pins" that make the corner joint.)

Rout the dovetail tongues on both edges of both strips, see Fig. 5. As you're routing, keep testing the fit in the grooves in the front/back pieces — it should be snug.

After the tongues are routed, simply rip the keys off the strips, see Detail in Fig. 5. Although you can to cut the keys flush with the surface of the trays, I cut them a sliver thicker than necessary. Then later, the whole assembly can be sanded flush.

After the first four keys are cut off the two strips, repeat this whole process to get four more keys. Then apply glue to the grooves and tap the keys in place. (Tap quickly here because the keys absorb moisture from the glue and swell.) Tap the keys in place until ¾" extends on *both ends*, see Fig. 6. (Be sure to clean off any excess glue from the ends of the keys.)

CUT OPENINGS. Before I assembled the trays, I cut openings in the front pieces. Drill two 1" holes 4" on center and ⅞" up from the bottom edge, see Detail in Fig. 6. Then cut out the waste on a band saw, and smooth up the opening with a small sanding drum on the drill press.

ASSEMBLE TRAYS

After the openings in the front pieces are smoothed out, glue the two sides and the front/back pieces together. Then trim the excess off on the ends of the keys so the corners can be rounded over later.

RABBET FOR BOTTOM. Next, rout a rabbet on the bottom of each tray for the plywood bottom, see Fig. 7. (I did this on the router table with a rabbeting bit and pilot.) Then cut the plywood bottom to fit the rounded corners of the rabbet.

Before gluing the bottom in place, finish sand the top side of the plywood. (It's easier to sand before it's installed.)

ROUND OVER CORNERS. Finally, I rounded over the four outside corners on each tray with a ⅜" rounding over bit on the router table. Then I switched to a ⅛" rounding-over bit to round over all the edges of each tray.

FINISH. To finish the trays, I sanded all surfaces smooth, and then applied Sutherland Welles Tung Oil (Medium Luster).

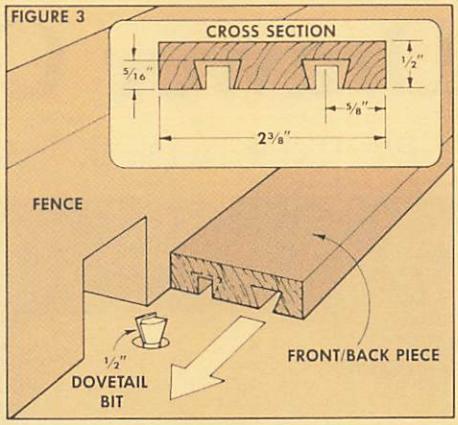

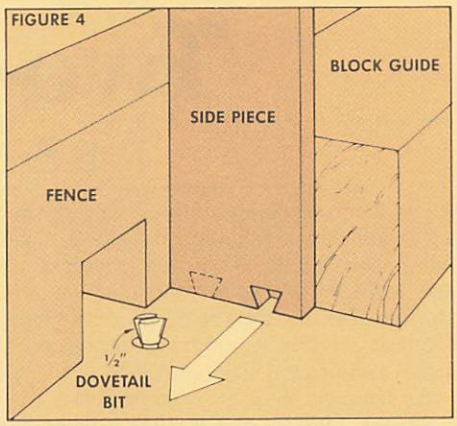

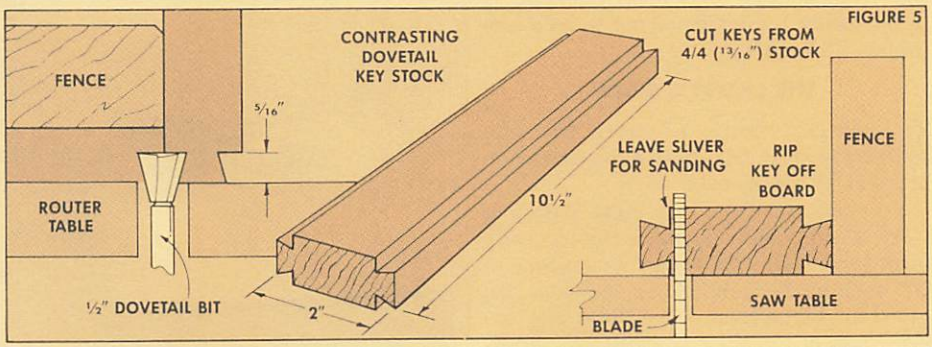

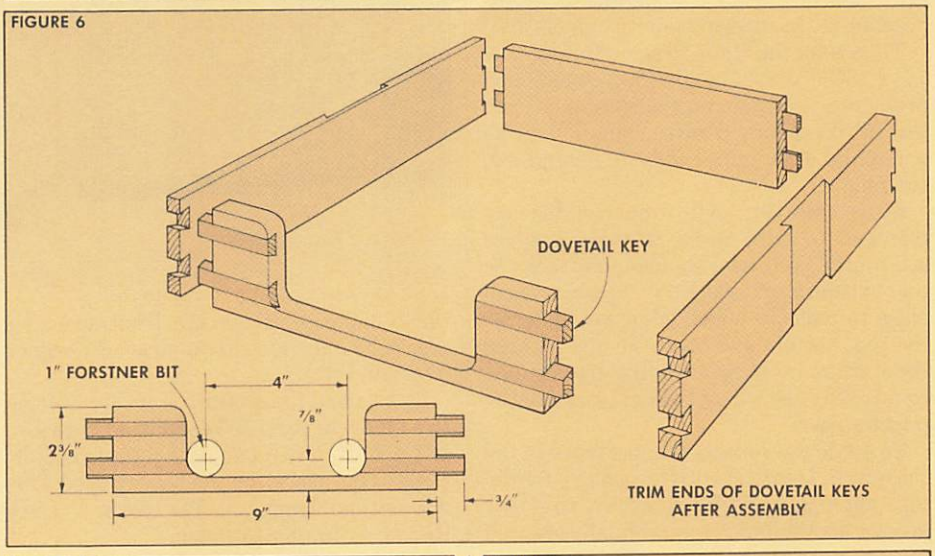

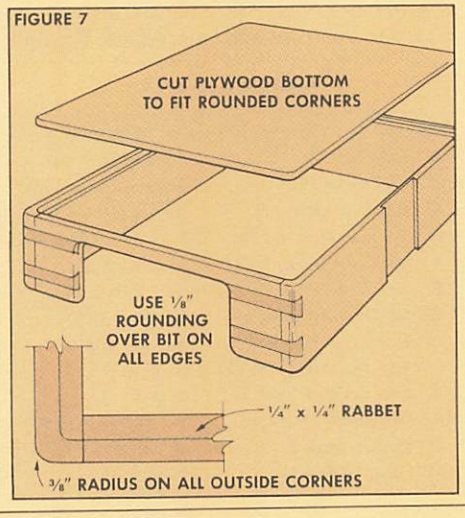

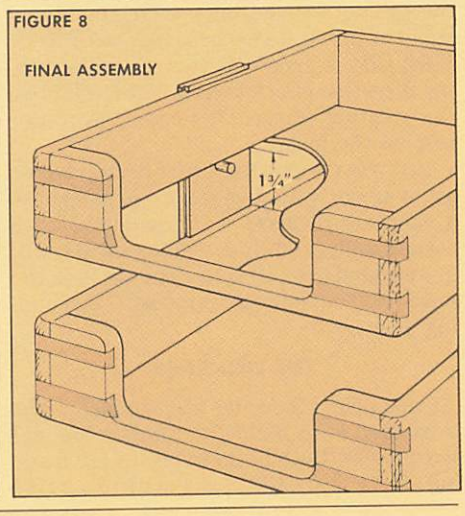

Two-Drawer Caddy

THE BEST PARTNER A DESK CAN HAVE

As we were working on the design of the adjustable desk (shown on page 4), we knew there would be a problem with storage. Rather than try to build a lot of extra storage drawers into the desk, we thought the best solution would be to build a separate, roll-around storage caddy.

As happens with a lot of projects, the caddy was built for one use (as a companion to the desk), but it turned out to be a nice project all by itself.

THE CADDY'S SIDES

To build this caddy, I started with the solid-wood sides (A). Both sides are made of 5/4 (1 1/16" thick) oak.

To make the sides, rip eight pieces of stock 5" x 17" and edge-glue the pieces to form two sides with rough dimensions of 20" wide by 17" long. After the sides are glued up, plane them flat. (Note: The "inside" face of the sides should be as flat as possible so the drawers operate smoothly.)

Then trim the sides to their final size of 18" x 16". (To avoid expansion/contraction problems, the grain on the sides must run the 16" direction, which means it will be horizontal when the caddy is assembled, see photo.)

ROUT GROOVE. After both sides are trimmed to size, three 1/4"-wide grooves are routed on the inside face to attach the top, bottom and back. First, I marked each piece to indicate which edge would be for the top, bottom and back. Then I marked the start and stop points of the grooves so I could easily see where to begin and end the routing pass.

To guide the router, clamp a fence to the side piece. I started with the groove for the top, then moved the fence to rout the groove for the bottom, and finally, routed the groove for the back so it starts and stops in the first two grooves, see Fig. 1. Each time a groove is routed, make sure the direction of cut is from left to right so the rotation of the bit forces the router against the fence.

ROUND CORNERS. After the three grooves are routed on each side piece, use a compass to mark a 3/8" radius at each corner, and carefully round the corners off. Then round over all the edges (on both the inside and outside faces) using a 1/4" rounding over bit.

THE END CAPS

At this point, the sides are complete. The next step is to build the caddy's top and bottom (C). Both of these pieces are made out of 5/8" particle board with 5/4 (1 1/16" thick) oak caps (B) on the front and back edges. The top also has a piece of Formica laminated to it.

CUT PARTICLE BOARD. Start by cutting two pieces of particle board to a rough size of 17" x 12". Then laminate a piece of Formica to the piece for the top. (I used Formica brand laminate. The color is Dark Henna #935, matte finish.)

END CAPS. Next, the end caps are cut and added to the front and back edges. Rip four caps 2 1/4" wide by 16" long. Once again, so I could keep things straight in later steps, I marked each end cap's position (top/front and back, bottom/front and back).

GROOVES IN CAPS. The end caps are joined to the particle board with tongue and groove joints. To keep this joint flush, the location of the grooves in the end caps is critical (especially on the top).

The caps on the top have to fit so they're perfectly flush with the surface of the For-

MATERIALS LIST

	Overall Dimensions: 17 1/4"w x 16"d x 20"h	
A	Side (2)	1 1/16 x 18 - 16
B	End Caps (4)	1 1/16 x 2 1/4 x 15 7/8
C	Top & Bottom (2)	5/8 x 11 1/4 - 15 7/8
D	Drawer Runners (6)	3/4 x 3/4 - 13 7/8
E	Lg. Drawer Front (1)	13/16 x 12 7/8 - 15
F	Sm. Drawer Front (1)	13/16 x 3 1/2 - 15
G	Lg. Drawer Sides (2)	1/2 x 9 - 13 3/4
H	Lg. Drawer Back (1)	1/2 x 9 - 13 1/2
I	Sm. Drawer Sides (2)	1/2 x 3 - 13 3/4
J	Sm. Drawer Back (1)	1/2 x 3 - 13 1/2
K	Drawer Bottoms (2)	1/4" ply. (cut to fit)
L	Caddy Back (1)	1/4" x 15 3/4 - 16 1/8
M	Formica Top (1)	11 1/4 x 15 7/8

CUTTING DIAGRAM

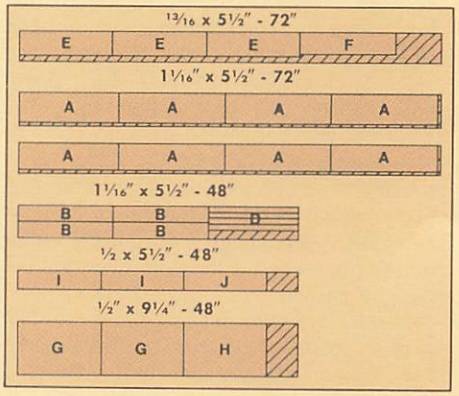

Index of Contents

This index covers all of the articles (including projects and techniques) contained in the first 30 issues of *Woodsmith*. The numbers following each listing refer to the issue and pages where you can find information on the listed subject. For example, 20:4-7 refers to information in *Woodsmith* issue No. 20 on pages 4 through 7.

Angle
  Cutting odd 20:23
  Drilling 4:10
Antique wall mirror 26:18-19
Band saw
  Blade 10:3
  Cutting duplicates 23:3
Barrister's bookcase 29:16-21,24
Bead cutting jig 16:3
Bed-side stand 18:4-7
Belt buckle 10:6
Belt sander 15:7; 10:10
Bench
  Garden 3:8-9; 27:12-13
  Trestle 23:24
Bevel/rip 3:3; 7:5; 25:8-9
Binder, wooden looseleaf 7:4
Bits, mortising 26:20-21
Blanket chest 16:12-15
Blind dovetail 12:7
Bookcase 7:6-7; 29:16-21,24
Bookrack 7:12
Boring jig, horizontal 12:13
Bow saw 5:5
Bowl
  Fruit 21:18-21
  Popcorn 25:24
Box
  Chisel 24:20-22
  Display 9:11
  End grain 15:13
  Jewelry 9:5; 24:20-22
  Music 6:6-7; 28:4-7,24
  Recipe 10:8
  Routed 13:12-13; 28:10-11
  Shop storage 15:14-15
  Slide-top (finger-jointed) 17:14-15
  Tissue 2:5; 19:24
  Toy 29:4-9,24
Box construction 3:5; 4:4-5; 26:4-6
Box joint 2:4-5; 17:12-13
  Drawers 17:16-19
  Jig 2:4
Branding irons 10:3
Bread board 20:24
Bread box, roll-top 4:6-8
Buckle, belt 10:6
Buffet table, gate-leg 20:14-17
Bullet catch 19:12,17
Butler's tray table 14:10-11,16; 16:3
Cabinet
  Barrister's bookcase 29:16-21,24
  Bed-side stand 18:4-7
  Caned-panel cabinet and hutch 22:18-22
Cabinet, *cont.*
  Chair-side 24:14-17
  Colonial dry sink 18:12-15
  Colonial wall hutch 18:16-19
  Contemporary hutch 13:4-7
  Curio 21:12-15; 26:12-17
  Display 9:11; 26:4-6
  European cabinet and hutch 22:18-22
  Frame and panel 8:8-11
  Modular storage system 22:12-15
  Raised-panel door 8:7
  Shop storage 25:4-7
  Spool 26:4-6
  Tambour stereo 17:6-9
  Tambour TV 25:14-19
  Tambour wall 17:10-11
Cabinet scraper 14:12-13; 15:7
Camp stool 3:7
Candle stand table 11:6-7
Caned-panel cabinet and hutch 22:18-22
Canister, turned 14:14-15; 25:8-12; 27:3; 30:23
Car, toy race 5:12
Carbide-tipped
  Router bit 21:8-9; 23:23
  Table saw blades 27:16-21,24; 28:19,23
Carpenter's triangle 1:6; 15:6
Cart, microwave/serving 23:8-11
Chair
  Contemporary 2:6-8, 15:8-11
  Deck 3:6-7
  Oak, dining 15:8-11
  Patio 27:8-11
  Seat 25:23
Chair-side cabinet 24:14-17
Chest
  Blanket 16:12-15
  Six-drawer (box joint drawers) 17:16-19
  Sweater 9:8-9
  Toy 29:4-9,24
Cheval mirror 30:4-8,24
Chisels 19:5; 20:8-11; 25:3
Chisel case 24:20-22
Christmas ornaments 6:10-12
Circles, routing 20:13; 21:10-11; 30:9
Circular
  Clock 30:10-11
  Inlay routing 26:22
  Mirror frame 12:10-11
  Table top 19:3; 30:12-15
Clamping
  Stops 9:12
  Table top 15:7
Clamps
  Hand screws 15:7; 28:3
  Hold-down 1:6
  Pipe 15:3,7; 28:3
  Table top 17:3
  Wedge 5:3
Clock
  Circular 30:10-11
  Desk 10:4
  Mantel 24:8-11; 30:23
Clock, *cont.*
  Octagonal 12:8-9
  Round 3:10-11
  Schoolhouse 21:4-7; 30:23
Clubs, woodworking 27:24; 28:24; 29:24; 30:24
Coffee table 19:14-17; 25:20-22
Coin sorter
  Columns 16:9
  Tray 10:6
Colonial
  Dry sink 18:12-15
  Wall hutch 18:16-19
Compass 7:3; 26:3
Cookbook/recipe shelf 6:4-5
Cooling rack 1:2
Corner
  Joint, plywood 22:3
  Template 29:3
Cove cutting 12:16; 20:23
Curio cabinet 21:12-15; 26:12-17
Cut-off jig, radial arm saw 22:3
Cutting board 1:1
Dado blade, adjustable 17:20; 23:23
Danish oil finishes 30:12-15
Deck
  Chair 3:6-7
  Squares 3:10
Dentil 26:12-19,22; 29:3
Dents 15:3
Desk
  Lap 9:6
  Shaker-style writing 12:4-7
Diamond stones 24:7
Dining table
  Circular with leaf 30:16-21,24
  Contemporary oak 15:4-5
  Drop-leaf 11:8-10
  Picnic 27:4-7
  Trestle 1:3-5; 23:12-15
Display case 9:11; 26:4-6
Door
  Caned-panel 22:18-22
  Glass 13:8-9; 22:18-22; 24:9; 25:19; 26:15-17; 29:19-20
  Hinges 13:8-9; 25:19
  Muntins 13:8-9
  Raised-panel 2:10-11; 18:4-19; 24:14-17
  Techniques 13:8-9; 29:20-21
Dovetail
  Blind 12:7
  Drawers 19:15-18
  Fixtures 22:6-10; 23:3; 27:3
  Groove 11:6-7
  Half-blind 22:4-9
  Hand-cut lap 22:4-5; 23:3
  Lamp 22:24
  Machine-cut lap 22:6-9
  Plywood 22:8-9
  Rabbeted 21:3
  Routed 22:6-9
  Saws 19:5
  Through 12:7; (issue 19)

Dovetail, *cont.*
Tongue and groove 9:7; 20:20-22,24
Dowels
Chamfering 10:3
Cutting 16:3
Grooved 16:3
Making 19:3
Sanding 9:12
Use 24:23; 29:16-21; 30:2
Drawer
Construction 4:5; 6:3; 15:14-15; 17:8-9, 16-19; 18:7,19-22; 19:15-19; 20:16; 21:15; 22:14-15,21-22; 25:4-7; 29:5-9,14-15,24
Plywood 22:14-15
Routed front 21:3
Drill bits, mortising 26:20-21
Drill guide, *Portalign* 12:3,13
Drill press
Collet chuck 12:3; 26:23
Guide 1:6
Hole boring jig 22:3
Mortises 18:23
Mortising bits 26:20-21
Pressmate table elevator 16:20
Router chuck 12:3
Table support 19:3
Drilling
Guide 1:6
Jig 25:3
Horizontal boring 12:13
Shopsmith Mark V 29:3
Template 22:12-13
Drop-leaf
Hinge 11:10; 14:8
Joint 11:10; 14:7-8
Pembroke table 14:4-8
Table 11:8-10
Ellipse 5:8; 14:3; 16:3; 19:3; 24:3
End boards 9:7
End grain
Box 15:13
Gluing 24:23
Sealing 9:3
File cabinet 7:8-9
Filler
Nail hole 15:3
Sawdust glue 17:3
Finger joint 17:14-15
Finishes
Non-toxic 19:23; 25:23; 28:24
Oil 30:12-15,24
Outdoor 27:14-15
Turning 25:23
Finishing techniques 14:9; 28:3; 30:12-15
Fixtures
Dovetail 22:6-10; 23:3; 27:3
Nailing 15:3
Frame
Circular 12:10-11; 30:10-11
Gallery clock 30:10-11
Gluing 26:11; 30:9
Molded edge 24:8-17,20-22; 29:20-21; 30:4-8
Mortise and tenon 26:7-11
Octagonal clock 12:8-9; 21:4-7
Octagonal, jig 21:17
Oval 5:9
Frame, *cont.*
Rabbet routing 26:22
Round clock 30:10-11
Web construction 8:8-11; 14:10-11; 22:18-22; 24:14-17; 25:14-17; 26:12-17; 29:4-21
Frame and panel construction 8:6,8-11; 16:12-15; 18:4-19; 24:14-17,20-22; 29:4-22
Gallery clock 30:10-11
Gate-leg buffet table 20:14-17
Glass
Cutting 13:16; 17:20
Door 13:8-9; 22:18-22; 24:9; 25:19; 6:15-17; 29:19-20
Mounting 11:3
Sanding 13:3
Gluing 7:3; 9:3; 10:3,9; 15:7; 17:4-5; 18:3; 19:23; 20:23; 21:9; 23:22; 24:23; 26:11; 27:23; 28:9,24
End grain 24:23
Frame 26:11; 30:9
Inlay 28:9
Jig 25:18
Miters 21:9; 30:9
Tambours 17:4-5
Goblets, turned 23:4-7; 24:23
Grinder tool rest 20:7; 24:3
Grinding wheels 20:4-6,12; 23:23
Half-blind dovetail 22:4-9
Half-lap 1:4,7,8; 2:11; 15:8-11; 16:6-7; 22:18-22; 27:4-13,22; 29:23
Hall mirror 21:16
Hand-cut dovetails 22:4-5; 23:3
Hand screws 15:7; 28:3
Hexagon 16:8-9; 18:3
Hinges
Butler's tray table 14:16; 16:3; 20:23
Dado 18:3
Door 13:8-9
Drop-leaf 11:10; 14:8
Glass door 25:19
Knife 13:8-9
Wooden (issue #9)
Hold-down jig 23:3
Holding jig, vise 29:3
Hole boring jig 22:3
Horizontal boring jig 12:13
Hutch
Contemporary 13:4-7
European caned-panel cabinet and hutch 22:18-22
Inlay 20:17; 26:6,22; 28:8-15,24
Jack plane 15:7
Japanese water stones 24:4-6; 26:23
Jewelry box 9:5; 24:20-22
Jigs
Angle drilling 4:10
Bead cut 16:3
Box joint 2:4
Dentil molding 26:22; 29:3
Dowel making 19:3
Drilling 25:3
Finger joint 17:14-15
Gluing 25:18
Hold-down 23:3
Hole boring 22:3
Horizontal boring 12:13
Joinery
Blind dovetail 12:7
Box 2:4-5; 17:12-13,16-19
Corner, plywood 22:3
Dovetail 19:6-11; 22:4-9; 23:3
Dovetail tongue and groove 9:7; 20:20-22,24
Drop-leaf 11:10; 14:7-8
Finger 17:14-15
Frame and panel 8:6,8-11; 16:12-15; 18:4-19; 24:14-17,20-22; 29:4-22
Half-blind dovetail 22:4-9
Half-lap 1:4,7; 15:8-11; 16:6-7; 22:18-22; 27:4-13,22; 29:23
Hand-cut dovetail 22:4-5; 23:3
Haunched mortise and tenon 14:10-11; 18:4-19
Keyed mortise and tenon 1:4
Lap dovetail 22:4-9
Locked miter 9:10
Locked tongue and dado 13:7
Machine-cut dovetail 22:6-9
Miter and spline 7:11; 21:8-9,12-16; 22:20-22; 30:2,4-11,16-22
Mitered half-lap 2:11
Mitered mortise and tenon 16:16-17
Molded mortise and tenon 24:12-13,24
Mortise and tenon 1:4; 8:3-5; 12:4-7,12; 13:10-11; 14:5,10-11; 15:8-12; 16:4-7,12-17; 17:16-18; 18:4-19,24; 20:14-17; 21:12-15; 22:18-22; 24:9,12-13,18-22,24; 25:22; 26:7-11
Open mortise and tenon 24:18-22
Parallel spline 9:9
Plywood dovetails 22:8-9
Rabbet and groove (also called rabbet/dado or rabbeted tongue/dado) 6:8; 10:9; 13:4-7; 18:12-15,19-21; 21:4-7,15; 22:12-15; 26:4-6
Routed dovetail 22:6-9
Rule 11:10; 14:7-8
Sliding dovetail tongue and groove 20:20-21
Stave construction 25:8-9; 27:3; 30:23
Stopped dado 2:5,11
Stub tenon and groove 29:22
Through dovetail 12:7; 19:6-11
Tongue and groove 1:5; 13:4-7; 18:12-19; 24:14-17
Jigs, *cont.*
Miter 12:15; 24:12-13
Molding 26:22
Mortise cutting 16:18; 18:23
Octagonal frame 21:17
Panel cut-off 25:13; 27:3; 28:3
Panel cutting 18:23; 22:11
Pin-routing 28:20-22
Radial arm saw cut-off 22:3
Radial arm saw router 20:3
Raised panel 20:3
Resawing 6:9
Ripping 25:13
Router-cut mortise 26:3
Routing round blanks 25:3
Shelf support 18:3
Taper 1:6; 5:4; 11:3
Tenon 16:18; 24:18-19; 28:3
Vise holding 29:3

Joinery, *cont.*
Twin tenon 12:12
Wedged mortise and tenon 15:8-12
Knife
Hinges 13:8-9
Holder 10:7
Lamp
Dovetail 22:24
Hanging 2:9
Lap
Desk 9:6
Dovetail 22:4-9
Lazy Susan 21:10-11
Legs
Tapered 11:11; 14:4-8; 28:12-13
Turned 12:5
Letter opener 10:7
Light bracket, swivel 9:4
Linseed oil finish 30:12-15
Locked miter 9:10
Locked tongue and dado 13:7
Machine-cut dovetail 22:6-9
Mantel clock 24:8-11; 30:23
Marking gauge 19:12-13; 21:3
Marquetry, inlay 20:17; 26:6,22; 28:8-15,24
Memo board 18:24
Microwave/serving cart 23:8-11
Mirror
Antique wall 26:18-19
Cheval 30:4-8,24
Circular frame 12:10-11
Hall 21:16
Vanity 10:5; 24:24
Miter
Cutting 21:8-9,17; 23:3; 25:23; 30:9
Gauge, table saw 25:3, 27:22; 29:23
Gluing 21:9; 30:9
Jig 12:15; 24:12-13
Locked 9:10
Mathematics 12:14-15
Miter and spline joinery 7:11; 21:4-9,12-16; 22:20-22; 30:2,4-11,16-22
Mitered half-lap 2:11
Mitered mortise and tenon 16:16-17
Modular storage system 22:12-15
Molded edge frame 24:8-17,20-22; 29:19-20; 30:4-8
Molded mortise and tenon 24:12-13
Moldings 24:10-13; 26:12-19,22; 28:4-7; 29:3,17-20
Mortise
Angled 15:8-11
Bits 26:20-21
Cutting jig 16:18; 18:23
Double dado 16:7
Drill press 18:23
Router-cut, jig 26:3; 30:22
Slot 8:4; 10:3; 13:10-11; 14:5,10-11; 16:4-5; 26:8-9
Through 15:8-11
Twin 14:5; 18:4-7,12-15; 20:14-17
Mortise and tenon 1:4; 8:3-5; 12:4-7,12; 13:10-11; 14:5; 15:8-12; 16:4-7,12-18; 17:16-18; 18:4-19,24; 20:14-17; 21:12-15; 22:18-22; 24:9,12-13,18-22,24; 25:22; 26:7-11
Mortise and tenon
Frame 26:7-11
Mortise and tenon, *cont.*
Haunched 14:10-11; 18:4-19
Keyed 1:4
Molded 24:12-13,24
Open 24:18-22
Twin tenon 12:12
Wedged 15:8-12
Muntins 13:8-9
Music box 6:6-7; 28:4-7,24
Nailing fixture 15:3
Nestled tables 28:12-15
Note board 18:24
Octagon 12:8-9; 16:10; 21:4-7
Frame jig 21:17
Oil finishes 30:12-15,24
Ornaments, Christmas 6:10-12
Outdoor
Furniture (issue #3); 27:4-13
Finishes 27:14-15
Panel cut-off jig 25:13; 27:3; 28:3
Panel cutting 8:12; 11:3; 18:23; 22:11
Parallel spline 9:9
Patio chair 27:8-11
Pembroke table 14:4-8
Pencil and card holder 2:12
Picnic table 27:4-7
Picture frame router bit 9:3; 10:3
Picture and glass mounting 11:3
Pin routing 28:10-11,16-18,20-22
Pipe clamps 15:3,7; 28:3
Plane
Adjustments 23:20-22; 25:23
Bench 23:16-22
Flattening 23:22; 25:3; 29:23
Jack 15:7
Sharpening 23:18-19
Planer, *Wagner* Safe-T- 10:10; 15:7
Planing, table top 23:21
Planter
Cedar pillars 3:4
Hanging 3:12
Redwood tub 3:3
Tapered-sides 16:10-11
Plunge routers 28:23
Plywood
Buying tips 30:23
Corner joint 22:3
Dovetails 22:8-9
Drawer construction 22:14-15
Splintering 22:11
Popcorn bowl, turned 25:24
Portalign
Drill guide 12:3,13
Shaper bit 12:10-11
Pressmate drill press table elevator 16:20
Rabbet and groove joint (also called rabbet/dado or rabbeted tongue/dado) 6:8; 10:9; 13:4-7; 18:19-21; 21:4-7,15; 22:12-15; 26:4-6
Rabbeted
Dovetails 21:3
Drawer front 22:9
Frame, routed 26:22; 30:9
Radial arm saw
Cut-off jig 22:3
Router jig 20:3
Table 20:3
Techniques 15:16; 16:16-18; 17:3;
Radial arm saw techniques, *cont.* 18:11,23
Raised-panel 2:10-11; 8:7; 18:4-19,23; 20:3; 23:23; 24:14-17
Rasp 26:23
Recipe box 10:8
Resawing 6:9; 28:4-7
Rip/bevel 16:8
Ripping jig 25:13
Roll-top bread box 4:6-8
Rosan inserts 22:11,14-15; 24:3; 27:24; 28:24; 30:3
Routed
Box 13:12-13; 28:10-11
Dovetails 22:6-9
Drawer front 21:3
Snack tray 28:16-18
Router
Bit, carbide tipped 21:8-9; 23:23
Bit, mortising 26:20-21
Bit, picture frame 9:3; 10:3
Bit, raised panel 23:23
Case 4:3
Chuck with drill press 12:3
Debris 24:23
Dovetail fixtures 22:6-9; 23:3
Guide, multi-purpose 17:20
Jig, centered grooves 30:22
Jig, dentil molding 29:3
Jig, mortise cutting 26:3
Jig, radial arm saw 20:3
Jig, round blanks 25:3
Pin 28:10-11,16-18,20-22
Plunge 28:23
Techniques 10:11-12; 13:3; 20:13; 21:3, 8-11; 25:13; 26:22; 28:10-11,16-18, 20-22; 30:4-11,16-22
Trammel attachment 30:4-8,10-11,16-21
Router table
Construction 20:18-19; 22:16-17
Inserts 30:3
Pin-routing attachment 28:20-22
Planing on 18:3
Sabre saw setup 30:3
Stand 22:16-17
Table saw extension 24:3
Rule joint 11:10; 14:7-8
Safety 15:3
Safe-T-Planer, *Wagner* 10:10; 15:7
Sander
Belt 15:7
Rockwell Speed Bloc orbital 14:12; 15:7
Sander stand, belt 10:10
Sanding
Circles 11:12
Disk 13:3; 15:3
Dowels 9:12
Drum 13:3; 15:3; 25:3
Glass 13:3
Pad 15:3
Table top 15:7
Saw, dovetail 19:5
Saw blade
Band 10:3
Table, carbide-tipped 27:16-21,24; 28:19,23
Cleaning 17:3; 21:23
Schoolhouse clock 21:4-7; 30:23
Sconce, candle 6:5

Scrap wood projects 3:12; (issue #10); 14:14-15
Scraper, cabinet 14:12-13; 15:7
Screws
  Brass 18:3
  Sheet rock 18:3; 19:23
Serving
  Cart 23:8-11
  Tray 19:19
Shaker-style
  Peg rack 2:3
  Step stand 19:20-22
  Tables (issue #11)
  Writing desk 12:4-7
Shaper
  Bit 12:3,10-11
  Guides 19:23
Sharpening
  Aids 20:7
  Carbide-tipped table saw blades 28:19
  Chisels 20:8:11; 26:23
  Diamond stones 24:7
  Japanese water stones 24:4-6; 26:23
  Plane irons 23:18-19
  Scraper blade 14:13
  Stones 20:4-7,12-13; 21:23
  Table saw blades 28:19
Shelf
  Aligning brackets 11:3
  Wall 20:20-21
Shooting board 13:3
Shop storage
  Box 15:14-15
  Cabinet 25:4-7
  Cart 13:14-15
Side table 11:4-5
Sliding dovetail tongue and groove 20:20-21
Snack tray, routed 28:16-18
Spalted wood 28:23
Spice box 6:3
Spindle turning 26:3
Spline
  Cutting 10:3; 15:4-5; 30:9
  Parallel 9:9
  Routed groove 21:8-9
  Use 23:22
Spool display case 26:4-6
Stave construction 25:8-9,24; 27:3; 30:23
Stereo cabinet, tambour 17:6-9
Stones
  Diamond 24:7
  Japanese water 24:4-6; 26:23
  Sharpening 20:4-7,12-13; 21:23
Stool
  Camp 3:7
  Shop 4:11
Stopped dado 2:5,11
Storage
  Modular system 22:12-15
  Shop 15:14-15
  Table saw 13:14-15
Sweater chest 9:8-9
Swivel light bracket 9:4
Table
  Buffet gate-leg 20:14-17
  Butler's tray 14:10-11,16
  Candle stand 11:6-7
Table, *cont.*
  Coffee 19:14-17; 25:20-22
  Contemporary oak 15:4-5
  Dining 30:16-21,24
  Double-duty 1:7
  Drop-leaf 11:8-10; 14:4-8
  Gate-leg buffet 20:14-17
  Leaf 30:18-19
  Nestled 28:12-15
  Picnic 27:4-7
  Pembroke 14:4-8
  Radial arm saw 20:3
  Router 20:18-19; 22:16-17; 24:3
  Shaker-style side 11:4-5
  Top 15:6-7; 17:3; 19:3; 20:17; 21:23; 23:12-15,21
  Trestle 1:3-5; 23:12-15
  TV tray 16:4-7; 17:20
Table saw
  Blades, carbide-tipped 27:16-21,24; 28:19,23
  Dado blade, adjustable 17:20
  Miter gauge 25:3
  Setup 20:3; 23:3
  Storage 13:14-15
  Techniques 15:15; 12:16; 16:8,10-11; 18:11,23; 20:23
Tambour
  Roll-top bread box 4:6-8
  Stereo cabinet 17:6-9
  Techniques 4:6-8; 17:4-11; 20:3; 25:14-19
  TV cabinet 25:14-19
  Wall cabinet 17:10-11
Taper/bevel 16:10-11
Taper jig 1:6; 5:4; 11:3
Tapered legs 11:11; 14:4-8; 28:12-13
Template, corner 29:3
Tenon
  Cutting 26:10-11
  Haunched 14:10-11
  Jig 24:18-19; 28:3
  Mitered shoulder 16:13,16-17
  Repairing round 23:3
  Staggered-shoulder haunched 13:10-11
  Stub 22:18-22; 24:14-17; 29:4-22
  Twin 12:12; 17:16-18; 20:14-17
Threaded inserts 22:11,14-15; 24:3; 27:24; 28:24; 30:3
Through dovetail 12:7
Tie rack 1:2
Tips and techniques (issues 7-30:page 3)
Tissue box 19:24
Tissue box cover 2:5
Tongue and groove joint 1:5; 9:7; 13:4-7; 18:12-19; 20:20-22,24; 24:14-17
Tool rest, grinder 20:7; 24:3
Tool storage 4:9,12
Toy
  Chest 29:4-9,24
  Race car 5:12
  Train 5:10-11
Tray
  Coin sorter 10:6
  Routed snack 28:16-18
  Serving 19:19
  Snack 28:16-18
  TV, tables 16:4-7; 17:20
Trestle bench 23:24
Trestle table 1:3-5; 23:12-15
Trivet, tiled 21:24; 22:23
Tung oil finish 30:12-15
Turning
  Bowl 21:18-21; 25:24
  Canister 14:14-15; 25:8-12; 27:3; 30:23
  Fruit bowl 21:18-21
  Gauge 21:3
  Goblets 23:4-7; 24:23
  Gouges 21:22; 24:23
  Legs 12:5
  Popcorn bowl 25:24
  Scraper 21:22; 22:23
  Spindle 26:3
  Tools 21:18-22; 22:23; 24:23
TV tray tables 16:4-7; 17:20
Vanity mirror 24:24
Veneer 14:10-11
Veneer tape 17:8; 22:11-14
Vise
  Dogs 28:3
  Holding jig 29:3
Wagner Safe-T-Planer 10:10
Wall shelf 20:20-21
Waste basket 7:5
Water stones, Japanese 24:4-6; 26:23
Web frame construction 8:8-11; 14:10-11; 22:18-22; 24:14-17; 25:14-17; 26:12-17; 29:4-21
Wedge clamps 5:3
Wood
  Dimensions 22:23
  Movement 9:7
  Outdoor use 3:11; 27:14-15
  Spalted 28:23
  Storage 19:23; 30:3
Wooden hinges (issue #9)
Woodworking clubs 27:24; 28:24; 29:24; 30:24

mica. (If the cap is too high, it's difficult to sand down without ruining the Formica.)

To get this perfect alignment, I didn't use a ruler or measurement. Instead, I used the actual laminated piece to set up the router table to rout the groove. Hold the laminated piece against the fence of the router table and adjust the fence until the full thickness of the piece touches the *outside* edge of a ¼" straight bit. (This same procedure can be used on a table saw.)

Then rout a ⅜"-deep groove in both caps for the top. When completed, the bottom of the groove should meet the bottom of the particle board, see cross section, Fig. 2.

CAPS FOR BOTTOM. Although the bottom piece of particle board is actually thinner (because it's not laminated with Formica), I used the same set-up on the router table to rout the grooves for the bottom caps. (These caps will be completely hidden from view by the bottom drawer. Perfection here is not so important.)

PENCIL GROOVES. The caps could be added as they are now, but I thought it would be nice to rout pencil grooves in the caps on the top. It takes three passes on the router table with two different bits to create this wide groove profile. First, use a ⅜" straight bit to rout a 3/16"-deep groove down the center of the caps, see Detail 1 in Fig. 3.

Then switch to a ½" core box bit, center it on one of the shoulders created by the straight bit, and rout the cove profile 3/16" deep, see Detail 2. Then repeat this process on the other shoulder.

GROOVES FOR BACK. Before the caps are joined to the top and bottom pieces, I routed the grooves used to hold the caddy's plywood back in place. These ¼"-wide grooves are located ⅜" from the back edge of the caps, see Fig. 4.

Then one last step. The bottom/front end cap is to be trimmed to a width of 1¼" (see Fig. 4) to allow space for the front of the bottom drawer.

TONGUES FOR END CAPS

After the end caps are complete, cut the ⅝" particle board for the top and bottom to final size of 16" x 11½", see Fig. 5.

RABBET TOP AND BOTTOM. Then to join the particle board to the end caps, rout rabbets on the two long edges of both pieces to form tongues that fit the grooves in the end caps. Here it's best to slowly sneak up on the depth of the rabbet, until the tongue fits snugly in the grooves.

SAND END CAPS. Because the face of the end caps will be butted against the Formica top, finish sand the two top caps before gluing them to the top.

ATTACH END CAPS. Finally, glue and clamp the end caps to the top and bottom. When the glue is dry, trim the two edges that will be joined to the caddy's sides, and reduce the total width to 15⅞".

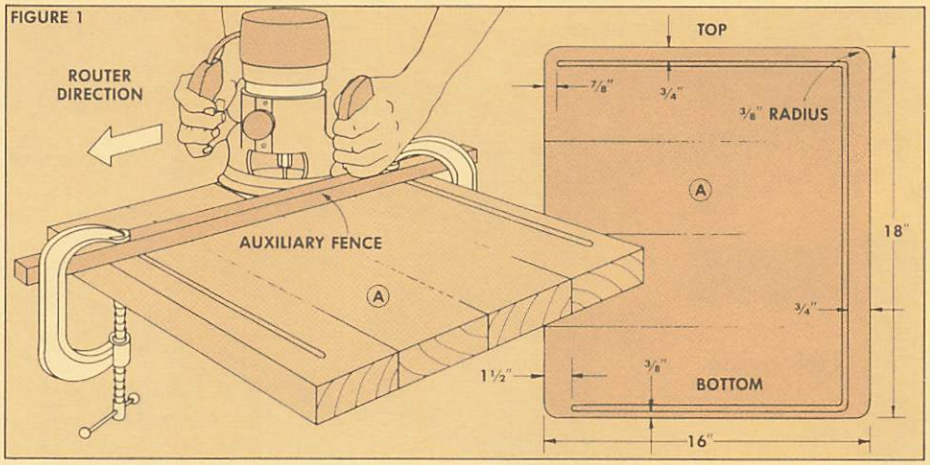

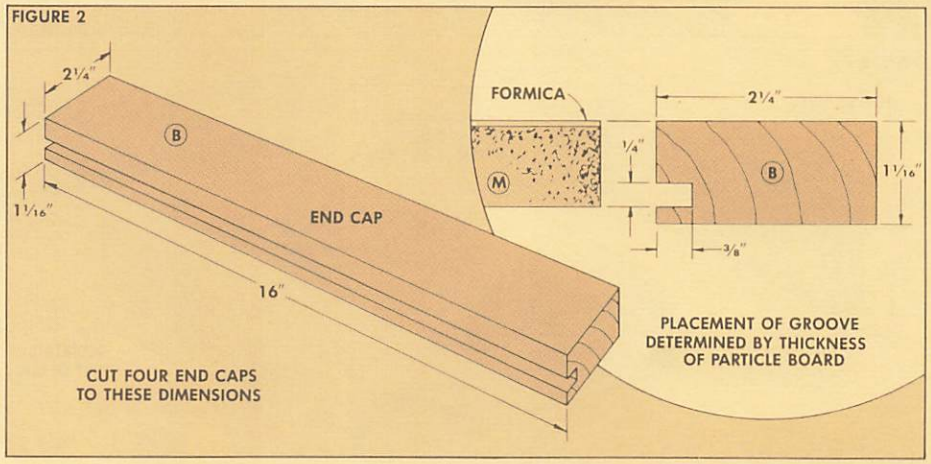

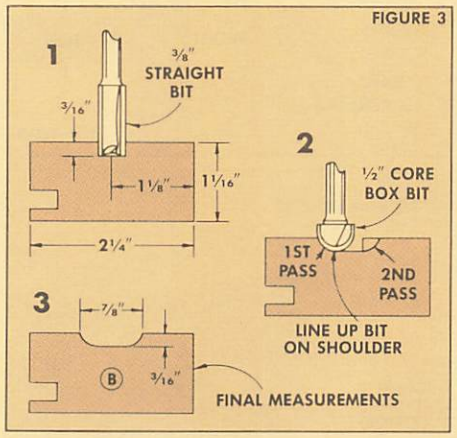

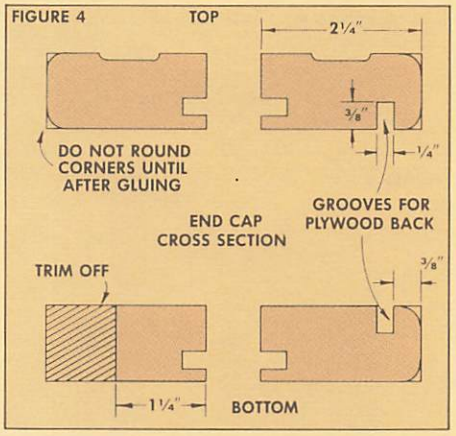

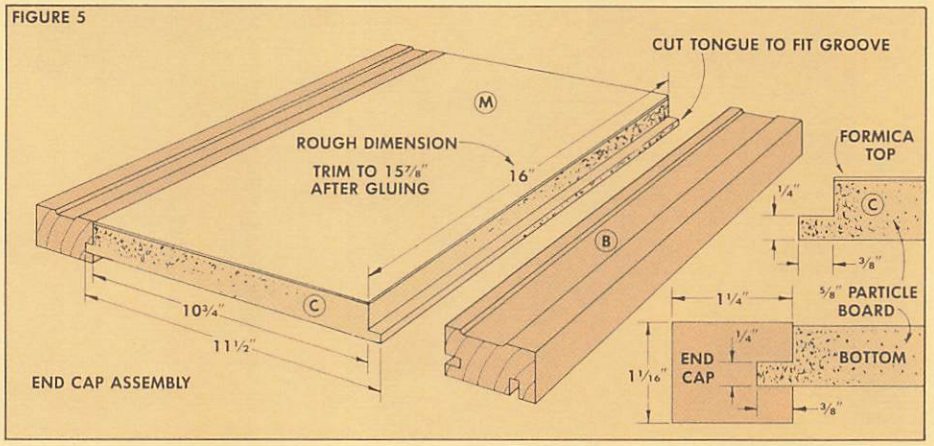

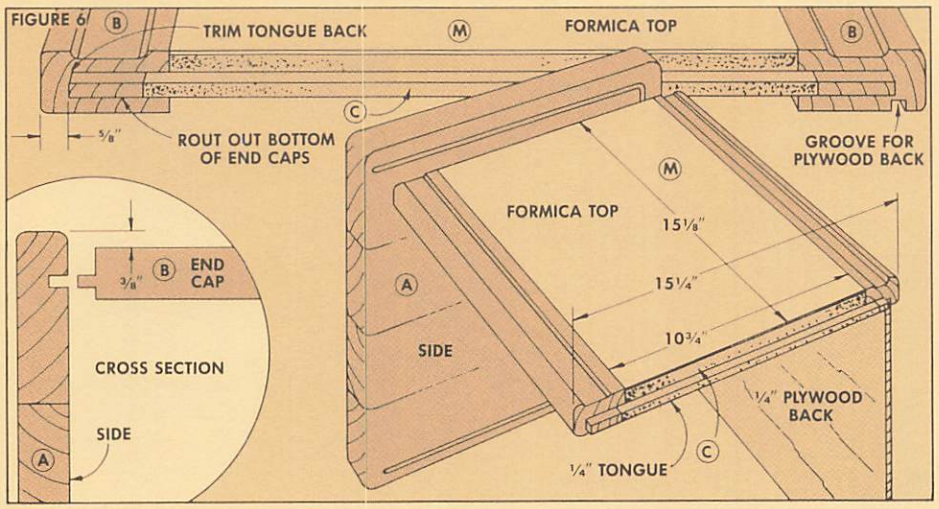

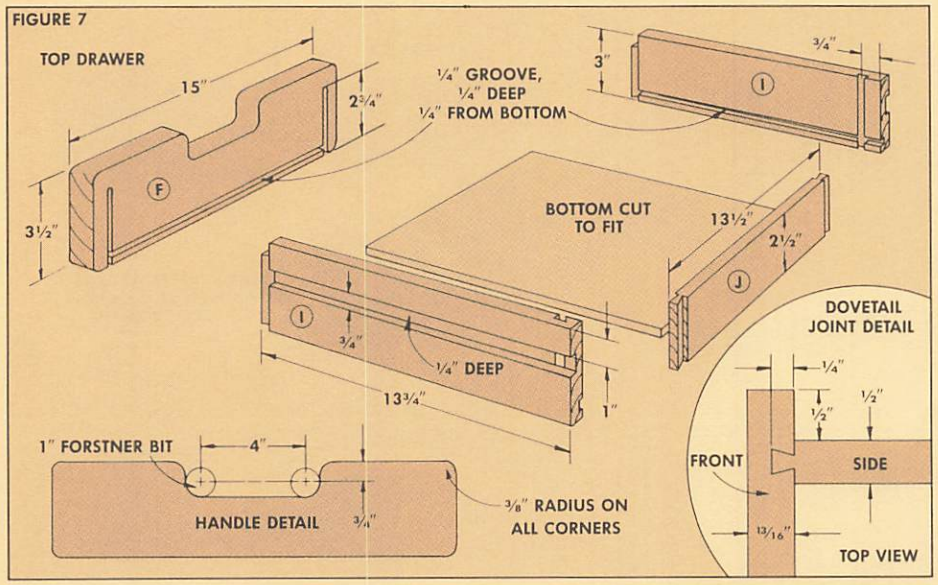

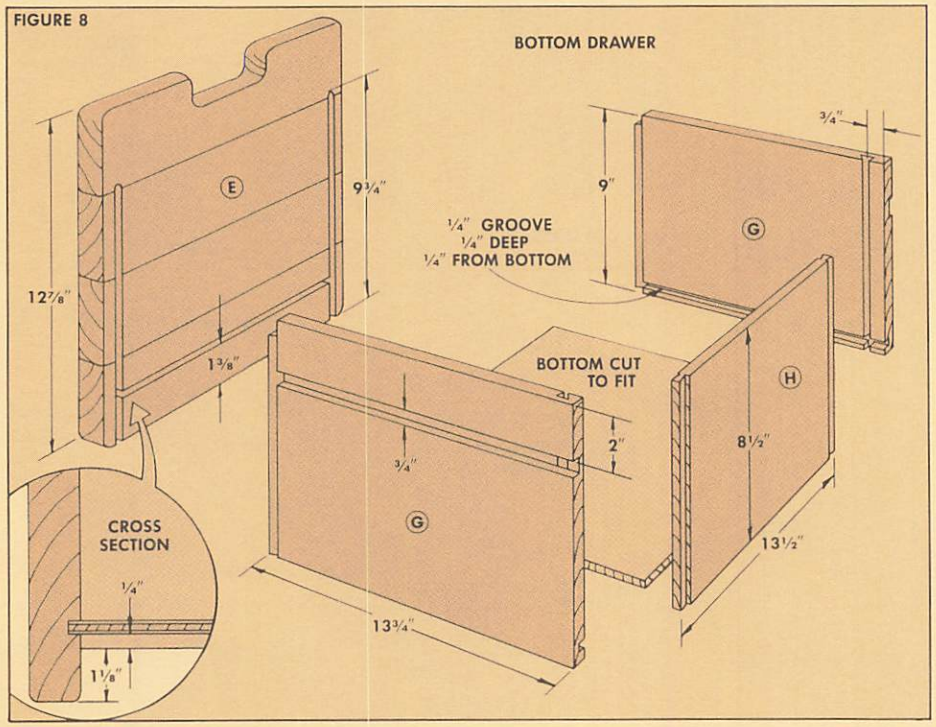

ATTACH TOP AND BOTTOM

To join the top and bottom to the caddy's sides, a rabbet is routed on the edges of the top and bottom to produce a tongue to fit the grooves in the sides, see Detail in Fig. 6. The fit here should be snug. Again, sneak up on the cut to make sure the tongues fit the grooves.

Also, the bottom side of the end caps must be routed flush with the bottom of the particle board, see Fig. 6.

When the thickness of the tongue fits the groove, trim about ⅝" off the front and back edges so the length of the tongue fits the length of the groove, see Fig. 6.

ROUND OVER EDGES. The last step is to round over the edges on the end caps with a ¼" rounding over bit. (Shop Note: I saved this rounding-over step until last to remove any evidence of chipout that might occur when the tongues are routed on the edges of the top and bottom.)

Round over the edges on both caps on the top, but only the back cap on the bottom. (The front cap on the bottom will be hidden by the drawer.)

THE BACK. The only other piece needed for the caddy is the plywood back. Dry clamp the top, bottom, and sides of the caddy together and measure the groove-to-groove opening. Then cut the ¼" oak plywood back about ⅛" less in both dimensions to allow for expansion/contraction of the solid-wood sides of the caddy.

THE DRAWERS

Normally, I would assemble the caddy at this point. But because the back is set into grooves when the caddy is assembled, it would be difficult to get inside to mount the drawer runners. Instead, I dry-clamped the caddy together and started work on the drawers.

The caddy shown here has a small drawer on top, and a larger drawer at the bottom that's sized to hold file folders. However, this bottom drawer could easily be changed to two smaller drawers, if desired.

DRAWER FRONTS. To determine the size of the drawer fronts, dry-clamp the caddy together and measure the front opening. This measurement runs from the bottom edge of the top cap all the way to the bottom edge of the caddy's sides. (The bottom drawer does not end at the bottom shelf, it goes all the way to the bottom edge of the caddy's side.)

The combined height of the drawer fronts should be a total of ¼" *less* than this measurement to allow a ⅛" space at the top and ⅛" between the drawers.

When the measurements of the drawer fronts are determined, cut the piece for the top drawer front to size. Then glue up enough stock for the bottom drawer front and trim it to size.

DRAWER SIDES AND BACK. To complete the drawers, I used ½" stock for the sides and back of the drawers and joined them to the fronts with dovetail tongue and groove joinery, see Figs. 7 and 8.

We've put all the step-by-step information for making this kind of drawer in a separate article on pages 21 to 23. But briefly, the sides are joined to the fronts by routing stopped dovetail grooves in the drawer fronts. These grooves are positioned so the sides are set in ½" from the edge of the front, see Figs. 7 and 8.

Next, dovetail grooves for the drawer back are routed on the inside face of the drawer's sides. Then dovetail tongues are cut on the drawer sides and the back to fit the grooves. Also, ¼"-wide grooves are routed for the drawer bottom, and ¾"-wide grooves are routed in the outside face of the sides for the runners.

DRAWER FRONT HANDLES. After the drawer's sides, back and bottom are done, I went back to work on the drawer front to make the notched openings that serve as handles. To make these notches, drill two 1" holes 4" apart, see detail in Fig. 7. Then cut out the notches on a band saw.

After they're roughed out, smooth the edges with a sanding drum on a drill press. Then round all the corners of the drawer front to a ⅜" radius, and use a ¼" rounding over bit (on the router table) to round over all the edges.

ASSEMBLE DRAWERS. Now the drawers can be assembled. Apply glue to the tongues on the drawer's sides and back and slide them into the grooves. Then glue the bottom in place and clamp the drawer together.

DRAWER RUNNERS

The drawers are mounted in the caddy with wooden runners that are screwed to the caddy's sides. Cut these runners to size so they extend into the grooves in the drawer's sides, allowing about 1/32" clearance between the runner and the bottom of the groove, see cross-section in Fig. 12.

Then to mount the runners to the caddy, counterbore and drill slightly over-sized holes for round-head screws and washers, see Fig. 11. (These holes are over-sized so there's enough flexibility to adjust the drawer runners as they're installed in the caddy.)

ASSEMBLE CABINET. At last, the caddy can be glued and clamped together. As the top and bottom are mounted between the sides, also be sure to put the back in place. (Note: Do not glue the plywood back in the grooves. The caddy's sides must be free to expand/contract.)

FINAL STEPS. After the caddy was assembled, I installed 2" casters to the bottom, see Fig. 10. Then I finished the caddy with two coats of Watco natural Danish Oil Finish.

FIGURE 9

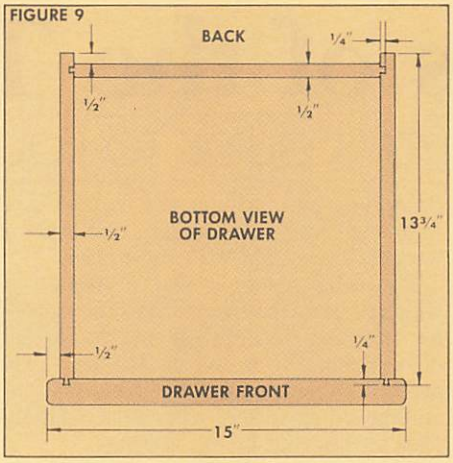

FIGURE 10

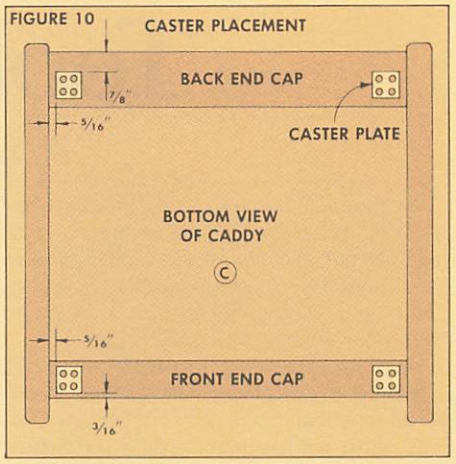

FIGURE 11

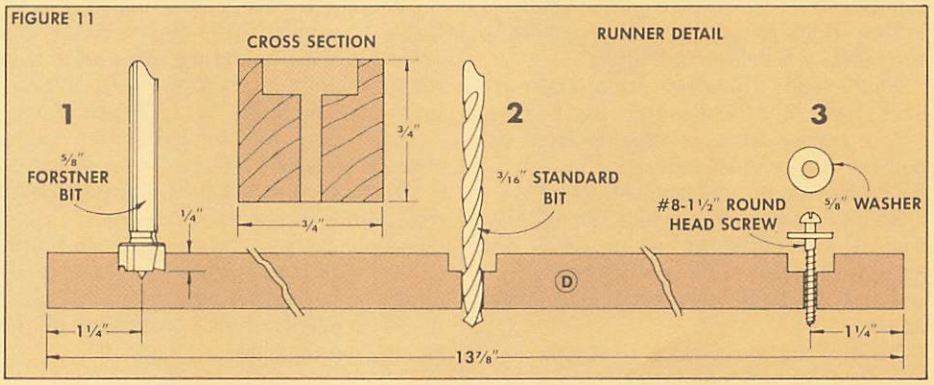

FIGURE 12

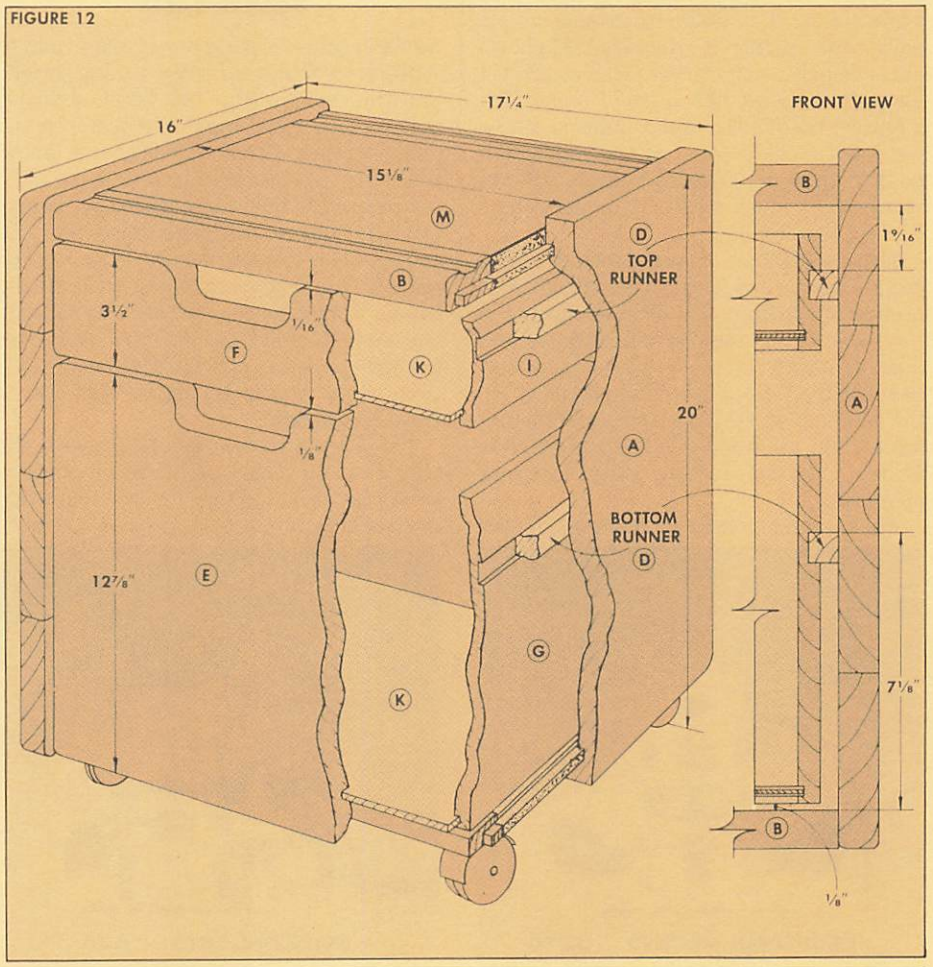

Tools of the Trade

A BUYER'S GUIDE TO ROUTERS

"You guys at *Woodsmith* sure do like to use routers. When you're not using it hand-held to rout grooves or cut circles, you've got it mounted to a router table. Now that you've got me convinced that I've got to have one, which one should I get?"

Our love affair with routers is no secret — almost every project we show in *Woodsmith* uses a router in one way or another. And since we use routers and the router table so often, we receive a lot of requests asking which router we use, and more to the point, which we recommend.

That's really a tough question. There are over thirty models of routers on the market to choose from — ranging from expensive heavy-duty industrial models to inexpensive (and underpowered) toys.

So we decided to buy a selection of these routers, and review the merits of each. But since we couldn't review every model, we reduced the field by setting some guidelines.

First of all, we decided to review only standard (not plunge-type) routers in a 1 H.P. to 1½ H.P. range (to provide ample power for cutting hardwoods). Then we put a ceiling on the retail price at $200. I know that seems like a lot of money for a router, but it's the upper limit we set so we could include some of the industrial-quality routers. Several routers we reviewed cost much less (one model retails for less than $60).

THE CRITERIA. After setting these guidelines, we decided to look at four groups of features. The first group is the *Controls*, which includes advantages and disadvantages to the style of base and handles; the type of switch and its location; the amount of starting torque (twisting force); and the ability to keep the router under control during start-up and operation.

The second group of features is *Bit Changing*, and includes the method used to change bits, and the size and style of wrenches provided with the router.

The third group is *Depth Adjusting*, which reviews features such as the method for adjusting the depth of cut, the method of securing the motor in the base, the amount of clearance in the base for bits, and the ability to keep a bit centered in the base at different height settings.

The fourth category is called *Router Table Compatibility*, and reviews any problems with mounting the router to a router table, any problems with obstructions, and the limits on the depth of cut.

Then finally, we included a short review of the accessories offered for each router.

THE RATING SYSTEM. To provide both consistency in our opinions, and to allow direct comparisons, we rated each router on the four major areas listed above by assigning a numbered grade from 1 (poor) to 5 (excellent). For a summary of the rating, see the chart on page 19.

ROUTER BASES

As we began choosing our initial group of routers, we found ourselves asking serious questions about the ball-handled bases that include on/off toggle switches on the motor housing. (This style is shown on the Black and Decker #3310, see photo 1.)

It was clear that there were two safety-related problems with this style base and switch. First, in order to turn on the router, you have to take one hand off the handle to engage the switch, leaving only one hand to hold the router. This one-handed control is awkward at best, especially when you're trying to hold onto a small ball handle.

The other problem has to do with the toggle switch. This type of switch can accidently be turned to the "on" position while the router is un-plugged. If you don't check the switch before plugging in the router, the motor could start instantly. That's dangerous.

Because of these two safety aspects, we decided to review routers with this type of base *only* if they weren't offered with a different style of base. With this additional criterion, we chose a group of six routers to review.

The first four routers in the following review are industrial quality — designed for long-term heavy-duty use. They include the Black and Decker #3310, Porter-Cable #675, Makita #3601B, and the Bosch #1603. The last two routers we reviewed, Sears #9-HT-1749 and the Black and Decker #7614, are sold for home use, and are not built for the heavy-duty use associated with industrial routers.

BLACK AND DECKER #3310

The Black and Decker router model 3310 is a basic, no-frills workhorse, that's designed for serious full-time routing.

CONTROLS. Although the model 3310 comes with two ball handles that are very easy to grip, when they're combined with a toggle switch, they still present the safety problems mentioned above. In defense of the motor on the model 3310, it produces very little starting torque, which reduces the problem of control associated with the ball-handled base.

BIT CHANGING. We found changing bits on the 3310 to be relatively easy. First of all, you can stand the router upside down (on its "head") to change bits. Then to help simplify things, the 3310 uses two identically-sized wrenches for loosening the collet nut from the spindle.

The only real problem is with the 5"-long stamped-steel wrenches supplied with the router. They extend less than 2" beyond the base — not enough to get a good grip.

DEPTH ADJUSTING. The depth adjusting

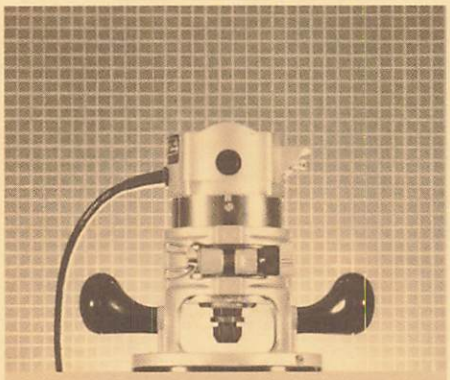

BLACK AND DECKER 3310

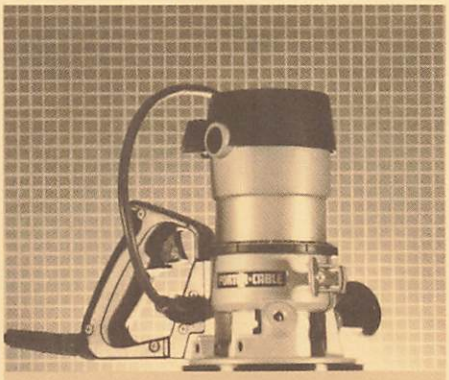

PORTER-CABLE 675

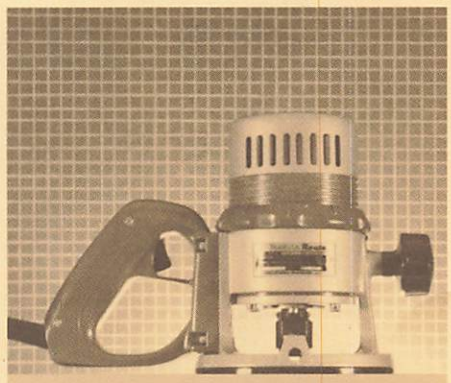

MAKITA 3601B

system on the model 3310 uses a rack and pinion gear. Although this system works smoothly, making adjustments in very small increments is difficult. And the calibrated knob on the 3310 is very small, and almost impossible to read accurately.

Once a depth adjustment is made, the motor is held in place by turning an easy-to-grip wing nut that tightens a split-arm assembly (within the solid base).

This split arm tightening system works well, and probably accounts for this router's ability to keep bits centered in the base at various height settings better than any other router we tested.

But when we tried using a ½" rounding over bit with the 3310, the collet hole in the plastic sub-base was so small that it prevented us from using even this commonly used bit.

ROUTER TABLE COMPATIBILITY. When it came time to attach the 3310 to a router table, we had some problems.

First, the screw holes in the base don't penetrate completely through the base. This means the screws must be a specific length to attach the router. If the screws are just a hair too long, they can easily strip out the threads in the base.

However, once we got it mounted to the router table, we soon found its Achilles' heel. When it's mounted on a ½"-thick router table top (as on the *Woodsmith* version), the collet's highest setting is still 5/16" below the surface of the table. This creates problems with some router bits. For example, we couldn't rout a full profile with a ⅜" rounding over bit.

ACCESSORIES. Black and Decker offers an edge guide and trammel point as two separate accessories that are both difficult to adjust, and similar enough that they could have been designed as one (cost-saving) attachment.

PORTER-CABLE

A couple of years ago, Rockwell sold its hand held power tool division to Porter-Cable. And although the name has changed, the new Porter-Cable model 675 is identical to the old Rockwell model 675.

CONTROLS. The base of the Porter Cable (Rockwell) 675 is a hybrid: "D" handle on one side with a ball handle on the other. (The on-off trigger switch is in the D-handle.) One feature not usually found with this handle arrangement is that the ball is at 120° to the "D" handle (instead of 180°, straight across), so it can be switched for right- or left-hand use.

Initially this appeared as a nice feature. But as we began to use it, we found the handle position made it difficult to keep the router from teetering when routing the edge of a work surface.

BIT CHANGING. Another problem with this handle arrangement is that it barely provides enough room to get the thin stamped-steel wrenches in the opening of the base, let alone enough room to tighten the collet nut.

Although the model 675 can be stood upside down to change bits, it's sometimes nearly impossible to get the collet nut to release. I don't know what the problem is, but it can be a real knuckle buster if those thin wrenches slip.

DEPTH ADJUSTING. On to a brighter subject. The depth of cut on the model 675 is adjusted by rotating the motor within the base. This system works well, and allows very small depth adjustments. However, the calibrated ring (used to gauge the depth of cut) is almost useless.

To secure the motor in place, the model 675 uses a split base and thumb screw. Even though the thumb screw is comfortable and easy to tighten, the split base system does a rather poor job of keeping the bit consistently centered at various height settings.

There is one other problem. Porter Cable just plain goofed when they designed the router's sub-base. The opening in the black plastic sub-base is too small to accept a ½" corner-round bit.

ROUTER TABLE COMPATIBILITY. To convert the model 675 for use on a router table, first you have to remove the "D" handle. This is just a matter of unplugging the cord from the motor and unscrewing the "D" handle. Then plug the cord into the auxiliary switch on the router table.

The depth of cut and range of adjustment provided by the model 675 is excellent, and since the sub-base is removed for use on the router table, there is no restriction on the size of router bit.

ACCESSORIES. The combination edge guide and trammel point attachment offered by Porter Cable works well — if you have the patience to make all the adjustments they've allowed for, and can justify its cost ($40.20).

MAKITA

In recent years Makita has joined the ranks with many other Japanese manufacturers providing quality products at reasonable prices. Makita has also made the decision of which model to review an easy one. Only the 1⅜ H.P. model 3601B fit within our guidelines.

CONTROLS. The model 3601B has a "D" handle base that provides good control while hand routing. The second handle is a large comfortable knob that serves double-duty as the locking knob (used to secure the motor).

BIT CHANGING. As on several other routers, the 3601B requires two separate wrenches to loosen the collet nut. But that's where the similarity ends.

The cast iron wrenches provided with the Makita router are a joy to use. They're long enough and hefty enough to provide a good grip.

Unfortunately, when it comes time to use them, there's a problem: The router tends to rock on its slightly domed head. But if you can get it to stand still, changing bits is relatively easy.

DEPTH ADJUSTING. The system for adjusting the depth of cut on the Makita consists of an adjusting ring that's threaded into the motor housing. When the ring is turned the motor moves up or down. This system works well, and allows depth adjustments in extremely small increments.

The only real disadvantage to this system is that when used on the router table, the motor can fall out of the base when the locking knob is loosened. And again, the calibrations on the threaded ring are clumsy, and all in all, ineffective.

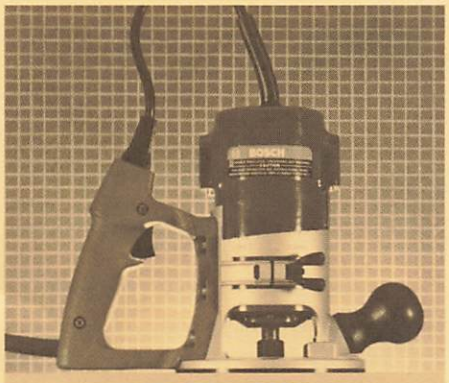

BOSCH 1603

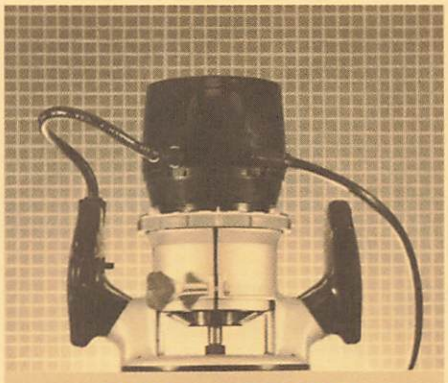
SEARS 9-HT-1749

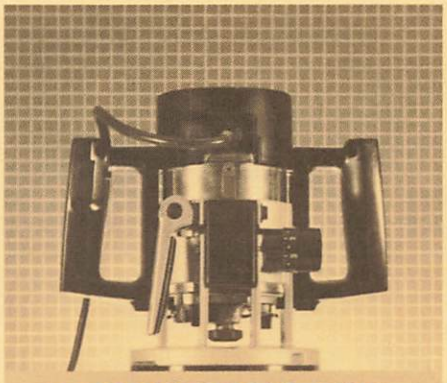
BLACK AND DECKER 7614

When the depth of cut is set, the motor is held in position by a very comfortable, easy-to-operate knob (which also serves as one of the handles). Initially, we liked the ease of using this knob, but later found its fault: It does a rather poor job of keeping the motor (and thus the bit) centered at various depth settings.

ROUTER TABLE COMPATIBLITY. When the Makita is mounted to the router table, the biggest problem is that its "D" handle has to be left dangling under the table top because it is direct-wired from the motor, and can't be disconnected completely.

Another potential problem is with the metal housing on the top of the motor. When the router is inverted on the router table, this housing acts as a collection point for all the sawdust floating around. If the Makita is used on the router table, this housing must be removed and cleaned regularly to prevent overheating and possible damage to the motor.

ACCESSORIES. Of all the accessories we used, Makita's were the most disappointing. The edge guide is very basic, and they don't even offer a trammel point. Although a "shop made" trammel point can be used, there's really no excuse for not offering one as an accessory.

BOSCH

The last of the industrial routers we chose is manufactured by Bosch (West Germany), who bought out Stanley's old power tool division a couple of years ago. And to be honest, it doesn't appear that any improvements were made in the process, and overall, we were quite disappointed.

CONTROLS. The Bosch 1½ H.P. model 1603 has a "D" handle base with the trigger switch located in the "D" handle. This is especially advantageous on this router because its starting torque is stronger than any of the other routers we reviewed. Without the two-handed control provided by the "D" handle system, starting stability would have been a problem.

BIT CHANGING. The Bosch router has several things working against it, but by far the worst is its system for changing bits. The wrenches are the worst of any router we reviewed. Not only are they too short, but they have heads at both ends. This makes it very hard to grip the short, 1½" length of wrench that extends beyond the edge of the base when changing bits.

But without a doubt, the biggest headache associated with the 1603 is that you can't stand it upside down while changing bits. For some reason, Bosch designed the motor so the power cord exits at the top of the motor housing . . . the worst possible place.

DEPTH ADJUSTING. The depth adjusting system on the 1603 is the simpliest system we reviewed, but it's also a good example of when simple isn't necessarily better. To raise or lower the bit, the motor is rotated as it rides on top of an angled rim on the base.

The problem is that the router must be either laid on its side, or held in one hand, making it rather difficult to set the depth of cut to a specific setting.

The 1603 also uses a split arm assembly and wing nut to secure the motor in the base, and produced rather disappointing results when it came to keeping the bit centered at various height settings. Another disheartening aspect is that the motor can fall out of the base when it's used on the router table.

ROUTER TABLE COMPATIBILITY. We ran into more problems trying to use the 1603 on the router table than on any other router. First, the screws holding the plastic sub-base to the router base are metric — making it almost impossible to find the longer versions needed to attach the router to the router table.

As with the Porter Cable, the "D" handle on the Bosch has to be removed from the base. But when it came time to plug the cord into an auxiliary switch, it was so short that the switch had to be located right next to the router — making it difficult to get to and defeating the safety aspect of an auxiliary switch.

Once the router was mounted, the problems with the depth adjusting system popped up again. At its highest setting, the collet is still ⅜" below the table surface. And again, depending on the bit being used, this lack of height can be a real problem.

Finally, in defense of the Bosch motor, its heavy-duty fan pushes air at a higher velocity than any of the other routers we reviewed, and should be able to ward off any flying debris that comes its way.

ACCESSORIES. Bosch offers a combination edge guide and trammel point that's similar to the Porter-Cable system, but with fewer adjustments to get in the way. But for some reason, the steel rods attaching the guide to the base are nestled around the ball handle, where they're constantly in the way.

SEARS

Who can resist a router when it's always on sale for 50% off? That seems to be Sears' way of keeping its prices in line, and one of their routers in every shop. Combine this "on sale" approach with a retail and catalog distribution system that is second to none, and it's almost impossible to resist buying Sears tools.

But to find out if their routers are worth having — even at 50% off, we decided to take a closer look at "Sears Best" 1½ H.P. model 9-HT-1749.

CONTROLS. One of the nicest things about this router is the pistol-grip handles, which provide excellent two-handed control while starting and operating the router. For ease of use, we'd rate them a notch above the "D" handle style.

BIT CHANGING. Without a doubt, the most unique feature on this router is a spindle locking system. By engaging a locking switch on the side of the motor housing, the spindle is locked in position, and power to the motor is disconnected.

This locking system eliminates the need for two wrenches to change bits. Instead, all you need is the one cheap stamped-steel wrench provided with the router. But in all fairness, this system of changing bits is one of the best that's come along.

DEPTH ADJUSTING. When they brought out this new model a couple of years ago, Sears changed the depth adjusting system from the old rack-and-pinion style, to a threaded ring system (similar to the one on the Makita). It's easy to make very small adjustments in the depth of cut, but the calibrating system is not well labeled, nor is it very accurate.

Once you've adjusted the router to the depth of cut you want, the motor is locked in place with a thumb screw that tightens a split base. Sears was scoring big points with us until we tried to tighten that thumb screw. Not only does the thumb screw have painfully jagged edges, the split base requires an excessive amount of tightening to hold the motor in place. And to top it off, the whole system does a poor job of keeping the bit centered in the base. If there's a worse, more painful, more irritating system, it would take a committee of politicians to find it.

ROUTER TABLE COMPATIBILITY. The Sears router can be easily mounted under a router table. (They even offer their own version.)

But one major problem has popped up. The fan blades on the motor have a tendency to break off. (This is apparently the result of a faulty design that creates a stress concentration on the blades.)

Although the fan creates a fair amount of air velocity, there is a strong possibility of significant damage if any debris does find its way to the opening in the motor housing.

ACCESSORIES. Turning to a bright spot, Sears has done an excellent job of providing accessories for their routers. The Sears multi-purpose edge guide and trammel point is a very good system that allows quick and accurate adjustments. Without a doubt, this is the guide (and router) we reach for when we need to rout a circle or cut a rabbet.

BLACK AND DECKER #7614

Black and Decker is the only manufacturer that has routers that fall into both the industrial and home use categories. The 1½ H.P. model #7614 is from Black and

Decker's "consumer" line of power tools, and retails for only $57.99.

This is a relatively new router and it's apparent that Black and Decker has put a lot of thought into this one.

CONTROLS. The model 7614 uses two slightly modified "D" handles (with a trigger switch) to provide a pistol-grip feel, and excellent two handed control while routing.

BIT CHANGING. The method used to change bits on the model 7614 combines some good old ideas with some common new problems. First of all, the Black and Decker model 7614 uses a spindle locking system similar to the one used on older Sears routers. This system incorporates a spring-loaded locking lever that engages one of six notches in the collar nut.

There's little doubt in my mind that just like on the old Sears routers, the screw that holds this lever in place will eventually wiggle loose, never to be found again.

The wrench supplied with the 7614 is, as expected, very short and made of stamped steel. What's new, however, is that the wrench is stored in the base of the router (it's held in place with a spring). But for me, this is just too close to the spindle for comfort. So I removed this entire assembly.

DEPTH ADJUSTING. Depth adjustments on the model 7614 are made using a rack and pinion system similar to Black and Decker's industrial model.

The depth adjusting system is also connected to the motor locking lever. This lever is quick and easy to use, and very comfortable. Its only drawback is that when it's tightened, it tends to change the depth of cut setting more than any other router we reviewed. The model 7614 also did a rather poor job of keeping the bit centered at different height settings.

And just like the industrial 3310, the opening in the sub-base on the 7614 is too small for many commonly used router bits.

ROUTER TABLE COMPATIBILITY. There are two major problems with attaching the Black and Decker 7614 to a router table. First, the screw holes do not penetrate completely through the base, so precisely-sized machine screws must be used.

The second problem has to do with the depth of cut. Like several of the industrial routers, the 7614 was plagued by the inability to raise the router motor and collet high enough for practical use when mounted on a router table.

ACCESSORIES. Black and Decker offers two separate guides for edge work and trammel point work. This in itself is a drawback but they added insult to injury by making both guides awkward to use, and difficult to adjust in small increments.

ROUTER RATINGS	B & D 3310	P. C. 675	MAKITA 3601B	BOSCH 1603	SEARS 9HT1749	B & D 7614
Controls	2	3	4	4	5	5
Bit Changing	3	2	4	1	5	4
Depth Adjusting	3	4	4	1	2	3
Router Table Compatibility	1	4	3	1	3	1
TOTAL	9	13	15	7	15	13

Although the design of the 7614 router is innovative, we were very disappointed with their accessories.

OUR CHOICES

After rating the features on each of these six routers, there's still one question to answer: Which router do we recommend?

The rating system we used revealed two routers that are a step ahead of the others: the Makita 3601B and the Sears 9-HT-1749. But to confirm this outcome, we decided to spend a little time with all six routers to get a feel for them under shop conditions.

As we used them in the shop, we all agreed that two features carry the most weight: the ease of changing bits (because we do it so often), and the ability to mount and use the router on the router table (a necessity in our shop).

With the emphasis on these two features, we had to eliminate three routers (both Black and Decker's and the Bosch) because of problems when they're mounted to the router table. This left three routers to choose from: the Sears, Makita and Porter Cable. Among these three, there is one major difference: cost.

If the choice is price-dependent, I would buy the Sears router (when it's on sale in the $50 to $60 range). It works well for both hand-held and router table routing, and includes many of the best features we found on any of the routers we reviewed.

The Sears depth adjusting system is very good (with the notable exception of the thumb screw), and the spindle locking system used for changing bits is the best (if they would only provide a decent-sized wrench). Even with its faults, the Sears router is difficult to pass up, when it's on sale.

If you're willing to spend about $150 for a router, I would definitely step up to the Makita 3601B. Again, the Makita isn't without its faults. When it's mounted on the router table, the handle has to be detached and left dangling, or a trough has to be routed out to accommodate it. But over the long haul, the industrial-quality of the Makita should outlast the Sears several times over.

To be fair, the Porter Cable model 675 is a close second in this price range. It's easier to mount to the router table than the Makita 3601B, but we have to tip the scales in Makita's favor because it's constantly a hassle to change bits on the Porter Cable model 675.

The bottom line is this: If you want only one, high-quality router for both the router table and hand-held use, the Makita 3601B is the one I'd buy.

ROUTER COMPARISON CHART

	BLACK & DECKER 3310	PORTER-CABLE 675	MAKITA 3601B	BOSCH 1603	SEARS 9-HT-1749	BLACK & DECKER 7614
Horsepower	1½ HP	1¼ HP	1⅜ HP	1½ HP	1½ HP	1½ HP
Collet Capacity	¼", ⅜"	¼", ⅜"	¼", ⅜", ½"	¼", ⅜"	¼"	¼"
Collets — Standard	¼"	⅜"	¼", ⅜", ½"	¼"	¼"	¼"
Base Opening	1¼"	1 3/16"	1 9/16"	1¾"	1 11/16"	1¼"
2 or 3 Prong Plug	3 prong	3 prong	2 prong	2 prong	2 prong	2 prong
Edge Guide ($)	$12.49	Combination	$9.00	$17.50	Combination	$12.49
Trammel Point ($)	$13.00	$40.20	N/A	$9.45	$14.99	$13.00
Retail Price	$176.00	$166.00	$196.00	$179.00	$119.99	$57.99
Price Paid	$109.99	$139.00	$155.55	$166.50	$59.99	$51.88

Drawer Construction

DOVETAIL TONGUE AND GROOVE

Building a drawer is no easy matter. Not only do you have to construct it so it hangs together under repeated use, but it has to fit the opening in the cabinet, and it has to be mounted so it slides in and out easily.

The problem is that if only one of these requirements isn't met, the drawer loses its usefulness. Yet, if all the requirements are met, nobody will even notice it because the drawer simply does what it's supposed to do. (Little thanks for so much effort.)

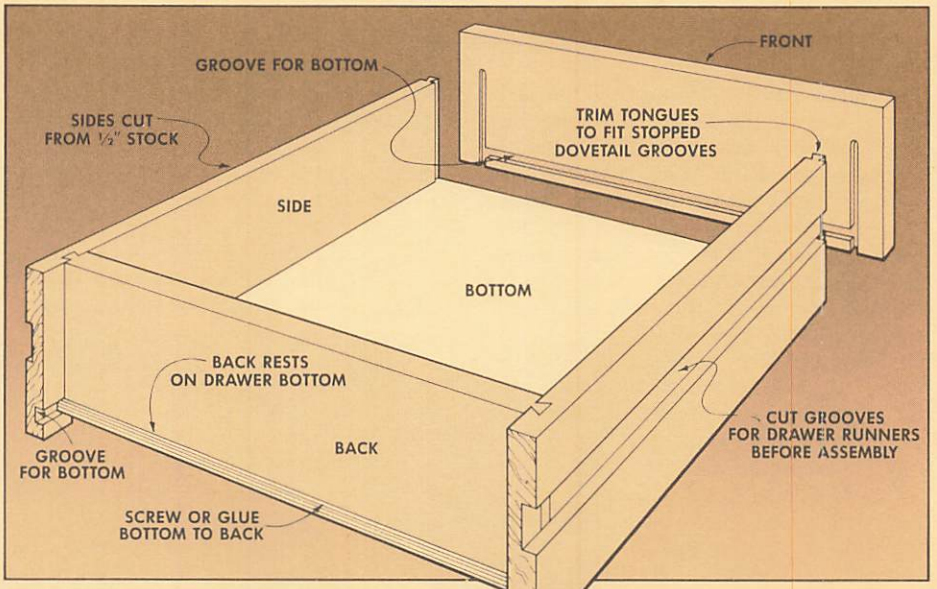

DOVETAIL TONGUE AND GROOVE

The key to building any drawer is the joinery. If the joints are strong, the drawer will stay together under repeated use. One of the best joints for building a drawer is a dovetail joint. But it's not the only one.

The drawers for the desk and the caddy are constructed with a variation of a dovetail. Instead of making dovetail pins and tails, the joint we used on these drawers is a dovetail tongue and groove. The dovetail shape on the tongue and groove provides good mechanical (interlocking) strength, but it's much easier to cut than a "normal" dovetail joint.

However, there are two limitations when using a dovetail tongue and groove. First, the drawer's sides must be set in ⅜" to ½" from the edges of the drawer front to allow room for the dovetail groove, as shown in Fig. 1. The problem here is that the dovetail groove must be positioned far enough from the outside edge of the drawer front so that the outside shoulder of the groove doesn't split out.

This is actually an advantage when using metal drawer slides to mount the drawer because the drawer's sides have to set in anyway to allow space for the slides.

The second requirement with this joint has to do with the tools needed to cut the dovetail shape on the tongue and the groove. To do this, you need a dovetail router bit mounted in a router table that has a fence to guide the workpieces.

(We naturally like the *Woodsmith* router table. If you'd like plans for building this table, send $1 to Woodsmith, 2200 Grand Ave., Des Moines, IA 50312.)

THE DRAWER FRONT

But before the joints can be cut, each piece for the drawer has to be cut to the proper size to fit the opening in the cabinet. I start by cutting the drawer front to size. (In what follows, I'm using the dimensions of the small recessed drawer on the caddy, shown on page 12, as an example.

1) **CUT DRAWER FRONT TO SIZE.** To get the measurements for the drawer front, measure the opening in the cabinet. The drawer front should be cut to length so it's a total of ⅛" *less* than the width of the opening. (This allows 1/16" on both sides for clearance.)

As for the height of the drawer front, it's best to trim it so it's a total of ⅛" to 3/16" less than the height of the opening. (Shop Note: The height of the drawer front can be trimmed a little more than the length because the wood will expand/contract more in this direction with seasonal changes in humidity).

If more than one drawer is going to fit in the cabinet opening (as on the caddy), size the drawer fronts so there's at least ⅛" between each one.

THE DRAWER SIDES

After the drawer fronts are cut, the drawer sides can be cut to size. Here you have two choices. The height of the drawer

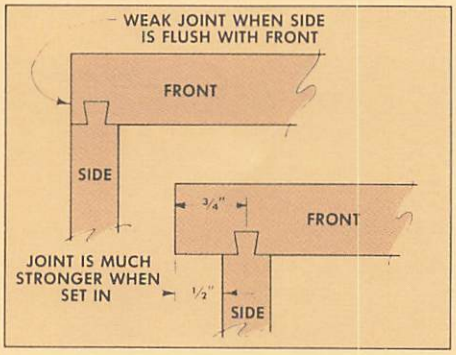

1 *The dovetail groove must be positioned far enough from the edge of the drawer front so the outside shoulder of the groove doesn't split out.*

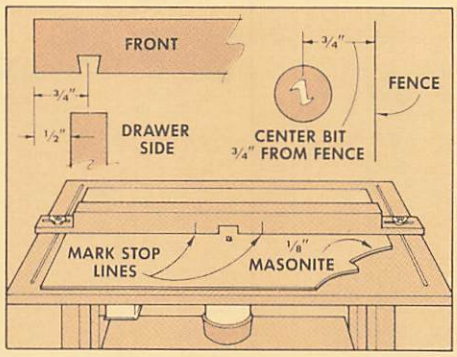

2 *To cut the dovetail grooves, place a ⅛" Masonite false top on the router table. Then cut groove so drawer side is set in ½" from the edge of drawer front.*

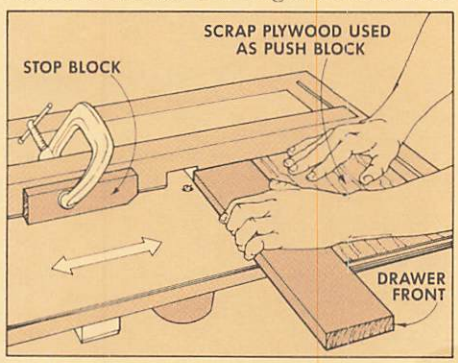

3 *Clamp a stop block on the fence to cut the stopped groove in the drawer front. Use a piece of scrap plywood to guide the workpiece through the dovetail bit.*

sides can either be the same height as the drawer front, or trimmed down a little.

When I'm using a dovetail tongue and groove, I like to trim down the height of the sides, and use a *stopped* dovetail groove. This keeps the joint from showing on the top edge of the drawer front.

2) CUT DRAWER SIDES TO WIDTH. For most drawers I use ½"-thick stock for the sides (and the back). In the case of the drawer in the caddy, I ripped this stock to width so the sides are ½" narrower than the height of the drawer front.

3) CUT SIDES TO LENGTH. After the drawer sides are ripped to width, they can be cut to length. The final length is determined by four mesurements: the total depth of the cabinet (this is 15" in the caddy), *less* the thickness of the drawer front (13/16"), *less* a 5/16" allowance between the back of the drawer and the back of the cabinet, *plus* the length of the dovetail tongue on the front edge (¼"). In the case of the drawer on the caddy, the drawer is also recessed ⅜" into the cabinet, so I subtracted an additional ⅜" to get the final length of the sides.

4) THE DRAWER BACK. As for the drawer back, it should be "cut to fit" after the sides are joined to the front. But we'll get to it later.

LAYING OUT THE JOINTS

After the drawer's front and sides are cut to size, the position of the dovetail grooves can be laid out on the drawer front.

5) POSITION GROOVES. In order to determine the position of these grooves, you have to jump ahead a little to how the dovetail tongue is cut. The tongue is cut by taking alternate passes on both faces of the sides, refer to Fig. 5. This means the tongue will be centered on the thickness of the side pieces. Thus, the groove on the drawer front must be positioned to account for a centered tongue.

On the drawer for the caddy, I decided to position the drawer side so the outside face was set in ½" from the edge of the drawer front, see Fig. 2.

If the drawer side is set in ½", and the tongue is centered on ½"-thick stock, then the groove must be centered ¾" from the edge of the drawer front, see Fig. 2.

ROUT THE DOVETAIL GROOVES

In order to set up the router table to cut a dovetail groove, it's helpful to have the opening in the router table (for the bit) as small as possible to provide the most support for the workpiece. (This is helpful later when the dovetail tongues are cut.)

On the *Woodsmith* router table I reduced the size of the opening by adding a false top (a piece of ⅛" Masonite) with a ½" hole in it for the bit, see Fig. 2. (The Masonite should extend under the router table's fence so when the fence is tightened down, it will hold the false top in place.)

6) CHOICE OF BITS. If the drawer's sides are more than ¾" thick, I use a ½" dovetail bit to cut the grooves.

Unfortunately, dovetail bits must be set at full depth to cut the grooves because the shape does not allow for raising it in increments. But a full-depth cut with a ½" bit can put quite a strain on the router.

To get around this problem, I clear out most of the groove by making a pass with a ¼" straight bit first. Then I switch to the ½" dovetail bit (set to full height) to the dovetail-shaped groove.

If the sides are ½" thick (as in the drawer on the caddy), I use a ¼" dovetail bit to cut the grooves. This bit is small enough so it can be set to full height to cut the groove in one pass.

7) ADJUST FENCE. Next, adjust the fence so the bit is *centered* ¾" from the fence. (The position of the groove mentioned above.) Since it's difficult to judge the center of a dovetail bit, I temporarily replace it with a V-groove bit and use the point of the "V" to position the fence.

When the fence is positioned, put the dovetail bit in and set its height (¼" for the drawer on the caddy), and make a trial cut on a piece of scrap. Then to check the position of the groove, hold the drawer side so it's centered over the groove and see if the outside face of the drawer side is ½" from the edge of the drawer front (see detail in Fig. 2).

8) CLAMP STOPS IN PLACE. After the fence is set up in the right position, there's one more step. As mentioned above, I trimmed down the height of the drawer's sides so they're ½" less than the drawer front. This means the grooves (for mounting the sides) must be stopped ¾" from the top of the drawer front.

However, there is one other consideration here. I stopped the dovetail grooves another ¼" less than that so no part of the groove shows above the top edge of drawer side. This is done by clamping a stop block to the fence of the router table so the block is 2⅜" from the *center* of the dovetail bit, see Fig. 3.

9) ROUT GROOVES IN DRAWER FRONT. Finally, the router table is set up to rout the grooves. Before cutting the "real" drawer front, make the cuts on a trial piece to get the feel of what's going on.

Place the end of the trial piece against the fence and use a piece of scrap plywood or particle board to guide it through the router bit until the leading edge of the trial piece touches the stop, see Fig. 3. Then carefully pull it backwards, out of the dovetail bit.

When one groove is cut, clamp the stop to the other end of the fence, and make the second cut, see Fig. 4. (Note: when making this cut, the drawer front is being fed in the wrong direction. The rotation of the bit will tend to push the workpiece away from the fence, so a firm grip is needed.)

If both grooves check out on the scrap, go ahead on the "real" drawer front. (Shop Note: It's best to sand the inside face of the drawer front before cutting the grooves. If the sanding is done later, it will, in effect, alter the depth of the dovetail groove.)

10) ROUT GROOVES FOR BACK. Before changing this set-up on the router table, go ahead and cut the dovetail grooves for the drawer's back. Here, for the sake of convenience, I used the same setting as on the drawer front. That is, the groove is set in

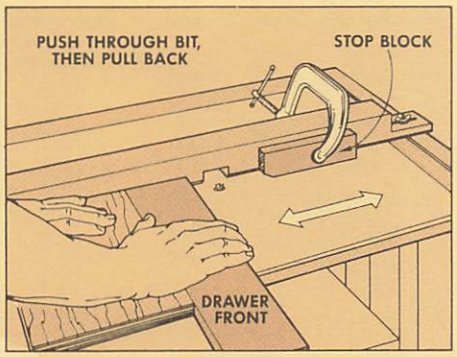

4 *To cut the stopped groove on the other end, the drawer front must be fed in the "wrong" direction. Hold it firmly as it's pushed through the bit.*

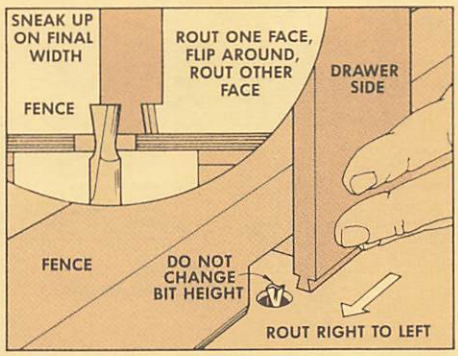

5 *To cut the dovetail tongue, take light passes on both faces of the drawer side. Then move the fence away from the bit to sneak up thickness of tongue.*

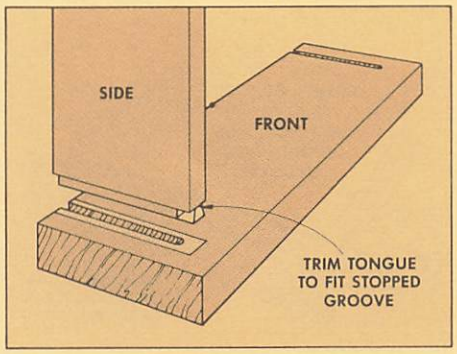

6 *The tongue should fit the groove with a loose friction fit. When it fits correctly, trim the length of the tongue to fit the length of the stopped groove.*

¾" from the end of the side piece. However, there's no need for the stop blocks because the grooves are cut all the way through (from edge to edge).

CUT THE TONGUES

After both sets of grooves are cut, the tongues can be cut on the front ends of the drawer sides.

11) **SET-UP FOR TONGUES.** To cut the tongues, leave the bit set at the same height, and adjust the fence so the dovetail bit protrudes only slightly beyond the face of the fence, see Fig. 5.

Then make a trial cut in a piece of scrap that's exactly the same thickness as the "real" side pieces. Hold the scrap against the fence and make a cut on one face, see Fig. 5. Then flip it around and make a cut on the other face.

At this point, the tongue should be too thick to fit in the groove. Move the fence just a smidgen farther away from the router bit, and make another pass on both faces. (Make very small adjustments on the fence each time. Each adjustment will remove double the amount of material because cuts are made on both faces.)

When I get close to the right adjustment, but the tongue is still a little too tight, I stop and start cutting the "real" piece. This way I know I'm close, yet I still have room to sneak up on the cut during the final passes on the tongue.

12) **THE RIGHT FIT.** The tongue should fit the groove with a loose friction fit. That is, it shouldn't be so tight that it has to be hammered into the groove. Instead, it should be just loose enough so when the tongue absorbs some of the moisture from the glue, it has some room to expand.

When the tongue is cut with this kind of fit, it may seem a little too loose — the drawer side may wag around in the groove a little. But that's okay. When the tongue expands from the glue, it will tighten up in the groove.

13) **TRIM TONGUES.** Once the tongues fit properly, they still have to be trimmed in length so they fit the length of the stopped grooves, see Fig. 6. I use a chisel to pare off enough of the dovetail tongue so the bottom of the drawer side is flush with the bottom of the drawer front.

CUT BACK TO SIZE

After the tongues are cut in the side pieces, the final measurements can be made for the drawer's back.

14) **CUT BACK.** Push the sides into place in the grooves in the drawer front. Then measure the distance between the inside faces of the drawer sides, near the drawer front, see Fig. 7. Add the depth of the two dovetail grooves (a total of ½") and cut a piece for the back to this length.

For now, cut the back to width to match the width of the drawer sides. Then cut dovetail tongues on both ends, once again, sneaking up on the fit.

GROOVES FOR BOTTOM

After the back is cut, you also need grooves in the drawer front and sides to hold the bottom in place.

15) **GROOVES IN DRAWER FRONT.** I use the router table to cut the grooves for the bottom. Mount a ¼" straight bit in the router and adjust the height so the bit makes a ¼"-deep cut. Then adjust the fence so it's ¼" from the edge of the bit.

The groove in the drawer front must be stopped at the two dovetail grooves (or else it will show on the edges of the drawer front). To do this, place the bottom edge of the drawer front against the fence, and hold the left end up over the bit, see Fig. 8.

Then slowly lower the drawer front so the bit engages right on the dovetail groove. Slowly feed the drawer front through the bit to make the groove along the bottom edge. When you feel it break through the second dovetail groove, stop and lift the drawer front off of the bit.

16) **GROOVES IN SIDES AND BACK.** With the same set-up on the router table, cut the grooves along the bottom edge of the sides and the back. There's no need to stop these grooves — make the cut along the entire length of the sides and back.

17) **RUNNER GROOVES.** If the drawer is going to be mounted to the cabinet with wooden runners (as were the drawers on the caddy), it's best to cut the grooves for the runners in the outside faces of the drawer sides before final assembly.

18) **TRIM BACK TO WIDTH.** Because of the inter-locking nature of the dovetail tongue and groove joints, the drawer cannot be assembled with the bottom in place. Instead, the drawer's back has to be trimmed down so the bottom can be inserted later.

Earlier when I cut the back to size, I cut it to the same width as the sides, and I also cut the groove for the bottom. This was done so the groove could be used as a guide to trim the back to final width. Cut right along the top edge of this groove so the back rests directly on the drawer bottom, see Fig. 9.

FINAL ASSEMBLY

At this point all four sides of the drawer are cut and ready for assembly.

19) **CUT BOTTOM TO SIZE.** As mentioned above, the bottom has to be inserted *after* the rest of the drawer is assembled. However, if the bottom is cut to fit tight in the grooves in the drawer's sides, it can be inserted just before the clamps are tightened to help hold the drawer square.

One other thing about the drawer bottom. I used ¼" Masonite for the drawer bottoms because it fits snugly in the ¼" grooves. Although oak-veneer plywood may have looked nicer, it's actually a little *less* than ¼" thick, which means it will rattle around in the grooves.

20) **ASSEMBLY.** To assemble the drawer, dab a little glue along the dovetail tongues on the drawer sides and push them into the grooves in the drawer front. Then glue the drawer back in place. Finally, put some glue in the grooves for the bottom and slide it in place.

Clamp the drawer together with pipe clamps, checking for square as the clamps are tightened. After the glue is dry, put a little wax in the runner grooves and it's ready to mount in the cabinet.

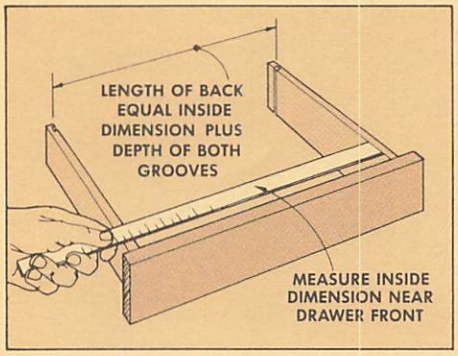

7 *To get the measurement for the drawer's back, assemble the sides and front. Measure distance between the sides and add the depth of the two grooves.*

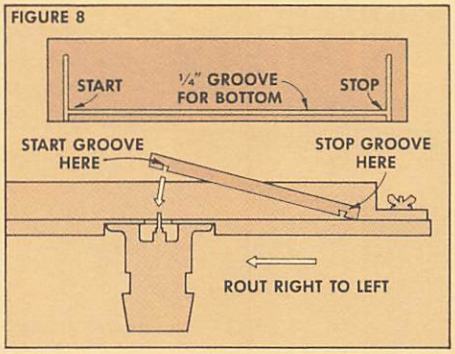

8 *To cut the groove for the drawer bottom, lower the drawer front right over the dovetail groove. Then rout until the bit breaks through the second groove.*

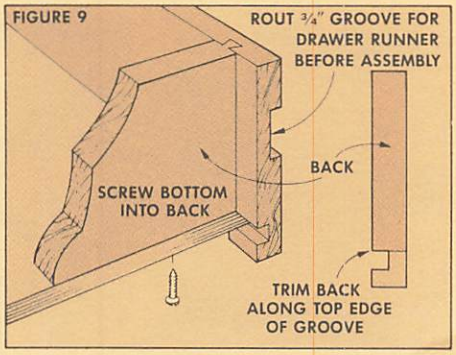

9 *Before assembly, cut ¼" groove for drawer's bottom and ¾" groove for the runner in drawer's sides. Then trim back so it rests on the drawer bottom.*

Talking Shop

AN OPEN FORUM FOR COMMENTS AND QUESTIONS

It happens every year, 'long about December or January. We get quite a few letters from readers asking why their projects are cracking and splitting.

The problem is moisture . . . or the lack of it. And even though wood is "dead," it's constantly adjusting to the amount of moisture (humidity) in the surrounding air.

This past winter, the entire nation experienced a quick and very nasty cold snap. As this cold air filters into your house and is warmed (at no small expense), its relative humidity drops. (Cold air holds less moisture than the same volume of warm air.)

This causes problems with anything made of wood. As the humidity in the air changes, the wood absorbs or releases moisture which, in turn, causes it to expand or contract . . . sometimes a lot more than you'd expect.

Although wood changes dimensions, it doesn't do it consistently. Wood moves to a much greater extent across the grain (in width) than with the grain (in length).

This fact was dramatically enacted for us just a couple of weeks ago. Remember the Trestle Table shown on the cover of *Woodsmith* No. 23?

The top of that table is made of solid oak boards glued up to a width of 30". On both ends of the top are cap boards that run perpendicular to the grain of the top.

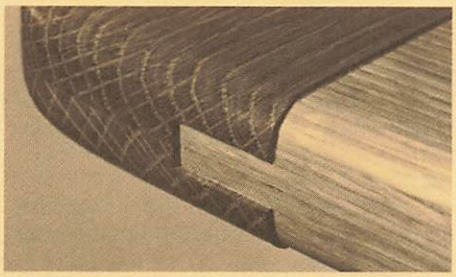

When we built that table top, the caps were trimmed and sanded in length to match the exact width of the main body. That was during the summer when the humidity was high.

This winter Ted (our Design Director) took that table home right about the time the cold snap hit. The air in his house was quite dry, and the table top began to contract — even though it's finished with three coats of polyurethane.

The photo above shows how the width of the table top contracted to a much greater extent than the length of the end cap. There's a ⅛" variation on *each* side, making a total difference of ¼".

There's no way to stop this movement. All you can do is allow for it in the design and construction of any project. In the case of the trestle table, the end cap was designed to allow for this movement. If it hadn't been, the top would have split.

If you would like to know more about wood movement, I highly recommend the book *Understanding Wood*, by Bruce Hoadley. (It can be ordered from: The Taunton Press, 52 Church Hill Road, Box 355, Newtown, CT 06470, $20.00.)

In this book, Hoadley includes all kinds of charts and formulas showing direct comparisons between temperature, relative humidity, percentage of moisture in the wood, and the combined effect these factors have on expansion and contraction of different species of wood.

Although this information tends to be a bit technical, it's very understandable — and well worth reading. And after spending an evening or two with this book, Hoadley's understanding of wood begins to rub off.

SMOKING RAGS?

*You made it clear in your article on oil finishes (*Woodsmith *No. 30), that oil and oil/resin combinations "dry" (solidify) by oxidation and polymerization.*

It's important to be aware that this drying process also generates some heat — not enough for anyone to sense on a coated surface, but enough to cause "spontaneous combustion" in crumpled up rags saturated with these finishes.

In my own workshop, I make sure that all the rags used for oil stains and clear wipe-on finishes are opened up when they're left to dry, rather than allowing them to remain all crumpled up. An even safer practice is to put them in a bucket and submerge them in water until it's convenient to throw them away.

For a long time, I considered this precaution about disposal of drying oil-soaked rags as just another finicky warning. Then several years ago, I witnessed a pile of crumpled up tung oil soaked rags ignite as if someone had touched a match to them.

Although it's less likely to occur in a cool basement workroom in the winter than in a hot garage in July, it's not impossible. So why take chances?

Sidney Lauren
Executive Director
Coating Research Group
Cleveland, Ohio

KING QUESTIONS

I've purchased a King brand S-1 Japanese finishing stone that's mounted on a wooden base. I'm wondering if I immerse the stone and base completely in water, will the base come unglued from the stone?

L. E. Montgomery
San Antonio, Texas

All King brand water stones can be kept in water constantly without damaging the stone itself. However, when the stone is mounted to a wooden base, the base itself should not be immersed.

The problem isn't with the glue holding the stone to the base, it's just that the wooden base, like any wooden object, shouldn't be kept constantly in water. We keep our water stones upside-down in a closed container with only a ¼" or so of the stone in water. This keeps the stone saturated, yet prevents the base from getting wet.

There's another problem with soaking Japanese water stones. If they dry out after every use, salt deposits (left when the water evaporates) can be a problem. One answer is to keep the stones in a closed container to prevent them from drying out. Another option is to use distilled water, because it contains no minerals that can build up on the surface of the stone.

Speaking of Japanese water stones, the Appendix to the 1984 Garrett Wade catalog (161 Ave. of the Americas, New York, NY 10013) lists two new combination Japanese water stones.

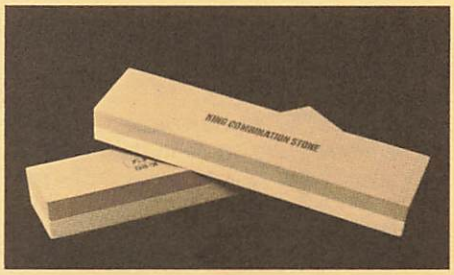

The first is a 250/1000 grit combination stone ($10.50); the second stone combines 1000/6000 grits ($14.85). This second combination is almost identical to the two individual stones we recommend in *Woodsmith* No. 24). At only $15, this 1000/6000 combination stone produces the best edge for the money we've seen.

According to Garrett Wade, both stones can be kept constantly immersed in water without the two halves separating.

Sources

WOODWORKING CLUBS

The list of woodworking clubs continues to grow. Here are the latest additions.

THE COASTAL WOODCRAFTERS GUILD. This club was formed about eight months ago in Savannah, Georgia, and already has 30 active members. The group sometimes meets in members' shops — something President Wayne Welch says is a learning experience in itself. For more information contact Wayne at 13309 Chesterfield Drive, Savannah, GA 31419 or call 912-925-1380.

SNAKE RIVER WOODCARVERS CLUB. Ross Darnell says this club got started about a year ago in Idaho Falls, Idaho. According to Ross, there's a lot of excellent talent in the group already. If you'd like more information, write to Ross Darnell, Route 3, Box 260, Idaho Falls, ID 83401 or call 208-529-8699.

THE SAWDUSTERS. From Dave Cook comes word of the founding of a woodworking club in Northwest Iowa (in and around Sac and Buena Vista counties). The Sawdusters' membership is around 30 and they invite any and all to attend.

Dave says he'd like to hear from other clubs about ideas for programs and speakers. If you're interested in joining, or if you have some information to pass along, contact Dave Cook, RR 1, Nemaha, IA 50567 or call 712-636-4528.

NEW NAMES. In the last issue of *Woodsmith* we reported about the formation of two woodworking clubs which were so new they hadn't had time to get themselves named yet. That situation has been rectified this time around and we're glad to introduce you to:

HAWKEYE WOODCRAFTERS is the name the fellows in Burlington, IA, gave their club. For more information contact Dwight Mulch, President, 2636 S. Main, Burlington, IA 52601.

WOODCHUCKS WOODWORKNG CLUB is the name they settled on in the Portland-Vancouver area. Don M. Schie is the person to contact at 6220 North Basin Avenue, Portland, OR 97217.

Our offer to help your woodworkng club recruit members is a standing one. If you'd like us to mention your club in an upcoming issue of *Woodsmith*, send the information (including the name of the person a prospective member should contact) to Steve Krohmer, Assistant Editor.

FINISHING PRODUCTS

We finished the projects in this issue with penetrating oil finishes.

Watco Danish Oil finishes are generally available at woodworking stores, unfinished furniture stores, paint and hardware stores. But if you can't locate a dealer near you, write or call: Watco-Dennis Corporation, 1756 22nd Street, Santa Monica, CA 90404; 213-870-4781.

Sutherland Welles products, on the other hand, are distributed only by Garrett Wade, 161 Avenue of the Americas, New York, NY 10013; Tel: 1-800-221-2942 (AK, HI, and NY call 212-807-1757). Or you can order directly from the manufacturer: Sutherland Welles, Ltd., 403 Weaver Street, Carboro, NC 27510; Tel: 919-967-1972.

FINISHING TIPS "CONTEST"

While I was working on the article on oil finishes in *Woodsmith* No. 30 (and thinking about the one that's planned for the next issue), it occurred to me that the secrets of wood finishing are like the secrets of woodworking. The really good ideas are those little things, often developed by accident, that make your friends say, "Why didn't I think of that?"

Over the years, we've shared a lot of woodworking tips on the *Tips and Techniques* page, but I'll admit to not paying quite as much attention to finishing tips as maybe I should have.

So, with just a little bit of fear about getting swamped with mail, here's an official invitation to share your favorite wood finishing tips with other *Woodsmith* readers — and maybe even make a little money at the same time.

The rules of this finishing tips "contest" are simple:

1. Send all entries to Mike Scott, Assistant Editor. Mike "volunteered" to read, sort and evaluate all the finishing tips that come in.

2. We'll pay a minimum of $10 for tips we publish, and if the idea is unusual, or works especially well, or makes us say, "Why didn't we think of that?" we will go to $25 or higher.

3. In the case of duplicate suggestions, we'll use the ones with the earliest postmarks.

4. Be as complete as you can in explaining your tip. If you mix your own finish or stain, be specific about brand names, quantities, and mixing instructions. Tell us all we'll need to know to duplicate your recipe in our shop. If you have a particular way you apply the finish, describe it in detail or include a drawing or photo (that doesn't have to be returned) to help explain it.

5. Every aspect of wood finishing — sealing, filling, staining, penetrating finishes, surface applications — is fair game for this "contest." But keep in mind that we're looking for the unique tips. Mixing your own wood filler out of sawdust and varnish is almost common knowledge, and is not likely to be published.

6. There's no formal deadline for this "contest." And, finally, we'll print as many of your tips as we can.

GLUING DOVETAIL ROUTER BIT

The dovetail router bit shown on the right in the drawing below is one of a kind. Bosch Power Tool Corporation manufactures this special dovetail bit with a little extra flute that creates an expansion slot for excess glue.

As far as we've been able to determine, Bosch is the only manufacturer that makes a dovetail bit with this profile, and they're only available in high speed steel (not as carbide-tipped).

Every other dovetail bit creates a profile as shown on the left in the drawing. So, what's the big deal?

We like to use the Bosch bit when making dovetail tongue and groove joints because normally the sharp corners of this joint fit so tight that even a little bit of sawdust in the groove makes assembling the joint difficult at best. This special Bosch bit solves that problem by creating a little extra space.

However, when routing "normal" dovetail joints (socket and pin) where "everything shows" on the side of the drawer, we still use a regular bit (like the one on the left in the drawing).

The Bosch bits come in two sizes — #85132, 9/32" ($4.65) and #85133, 9/16" ($7.40). If you want to locate a Bosch distributor near you, call or write Bosch corporate headquarters, P.O. Box 2217, Highway 55 West, New Bern, NC 28561; or call 919-633-4133. The Bosch customer service department will give you the name of a dealer near you.

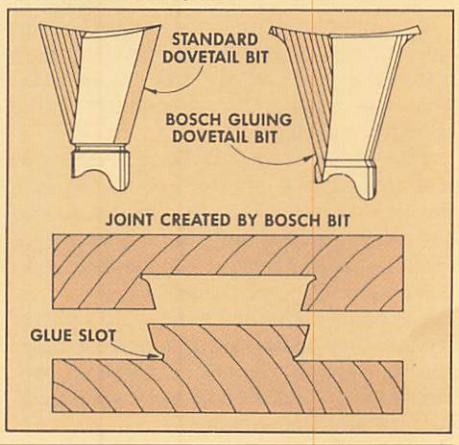

Back Issues

1

- Colonial Trestle Table With Center Stretcher Joined To Legs with Wedged Mortise And Tenon
- Double-Duty Table. One Design Serves As a Coffee Table Or An End Table
- One-Evening Projects: Tie Rack, Cutting Board
- Shop Projects: Finger Clamps, Drill Press Guides

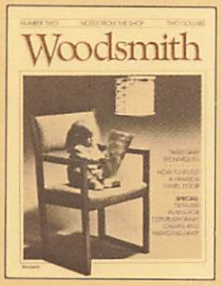

2

- Contemporary Dining Room Chairs With Padded Seat And Back
- Woven Veneer Lamp
- Shaker Peg Coat Rack
- Step By Step To Cutting Raised Panels
- Joinery: Mitered Half-Lap With Groove For Panel
- Joinery: Box Joint
- Tissue Box Cover

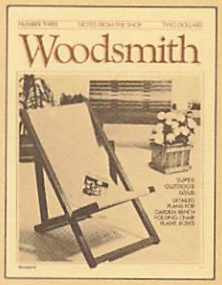

3

- Redwood Garden Bench With Serving Tray and Plant Box
- Canvas And Redwood Deck Chair And Camp Stool
- Redwood Plant Tub
- Cedar Plant Pillars
- Scrap Wood Project: Hanging Planter
- Modular Deck System

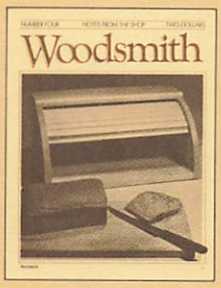

4

- Roll-Top Bread Box: The Original Version
- Tool Storage For Drill Bits
- Router Case For Storing Router And Bits
- Shop Stool With Angled Legs
- Techniques: Three Jigs For Drilling Holes At An Angle
- Shop Storage Box
- Scrap Wood Tool Holder

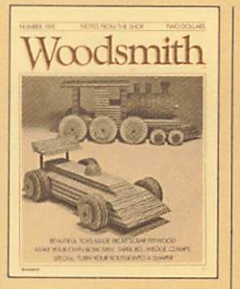

5

- Router Table: A Full-Sized Table That Converts A Router Into A Shaper
- Wooden Toys: Train And Race Car Made From Laminated Plywood
- How To Draw An Elipse
- Oval Picture Frame
- Wedge Clamps: Bar Clamps Made From 2x4s
- Adjustable Taper Jig

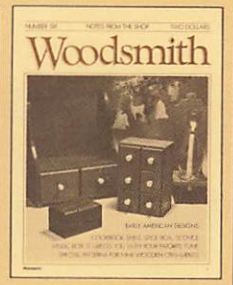

6

- Music Box With 18-Note Musical Movement
- Colonial Cookbook Shelf
- Cherry Candle Sconce
- Six-Drawer Pine Spice Box
- Technique: Resawing. Two Jigs For Resawing On A Table Saw Or A Band Saw
- Joinery: Locked Rabbet
- Wooden Christmas Ornaments And Patterns

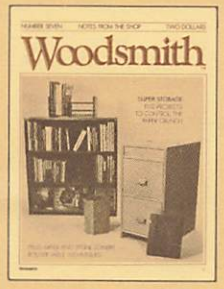

7

- Book Case With Magazine Display Shelf
- All-Wood File Cabinet
- Book Rack With Sliding Stop
- All-Wood Looseleaf Binder
- Octagonal Waste Basket
- Methods For Using A Router Table
- Joinery: How To Cut A Mitered Spline Joint

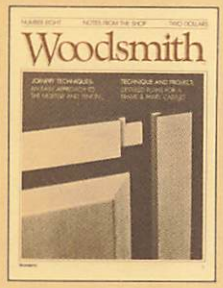

8

- The Basics Of Mortise And Tenon Joinery
- How To Cut A Slot Mortise On A Drill Press
- How To Cut A Tenon
- Haunched Mortise And Tenon With A Groove
- Colonial Wall Cabinet With Raised Panel
- Contemporary Frame And Panel Cabinet

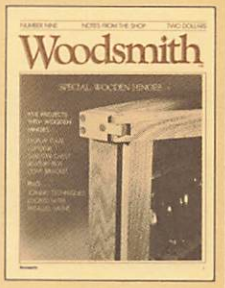

9

- Display Case With Glass Door
- Sweater Chest With Solid Wood Hinges and Clasp
- Colonial Lap Desk
- Jewelry Box
- Adjustable Light Fixture With Bracket Hinges
- Joinery: Dovetail Tongue And Groove, Parallel Spline, Locked Miter

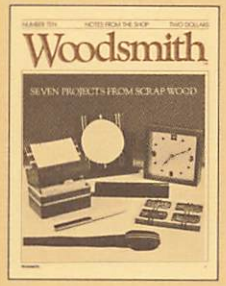

10

- Laminated Frame For A Desk Clock
- Vanity Mirror
- Gift Projects: Coin Tray, Wooden Belt Buckle, Knife Holder, Letter Opener
- Recipe Box With Card Display
- Joinery: Rabbet/Dado Joint
- Techniques For Gluing-Up Laminations

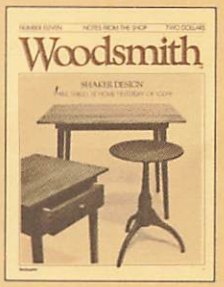

11

- Shaker Side Table With Single Drawer And Tapered Legs
- Shaker Candle Stand With Spider Legs
- Shaker-Style Drop-Leaf Dining Table
- How To Cut A Drop-Leaf Edge And Mount Hinges
- Mathematics of Cutting A Tapered Table Leg

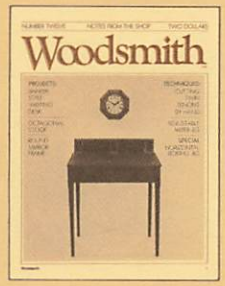

12

- Slant-top Writing Desk With Pigeon Hole Section
- Octagonal Wall Clock
- Round Mirror Frame Cut From A Hexagonal Frame
- Joinery: Twin Tenons Cut By Hand
- Horizontal Boring Jig
- Mathematics Of Miters
- Adjustable Miter Jig
- Technique: Cutting A Cove

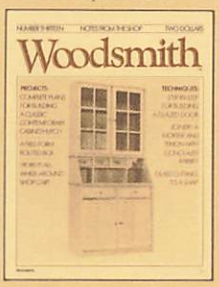

13

- Contemporary Hutch/Cabinet With Six-Pane Glass Doors On The Hutch
- Joinery Technique For Glazed Doors: Cutting The Muntins And Stops
- Joinery: Staggered Shoulder Mortise And Tenon With Rabbet For Glass
- Routed Jewelry Box
- Roll-Around Shop Cart

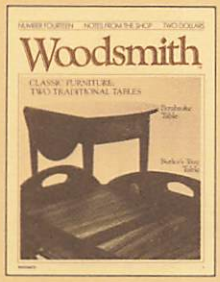

14

- Pembroke Table: A Classic, Table With Oval Top And Drop Leaves
- Butler's Tray Table With Fold-Up Leaves
- Scrap-Wood Canister
- How To Sharpen And Use A Scraper Blade
- Finishing: How To Get A Hand-Rubbed Satin Sheen
- Drawing An Elipse To Size

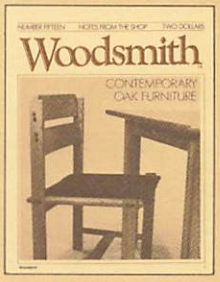

15

- Contemporary Oak Chairs Built With Wedged Mortise And Tenon Joints
- Contemporary Oak Table
- Joinery: Step By Step To A Wedged Mortise & Tenon
- End-Grain Box Top
- Shop Storage: A Case With Small Storage Drawers
- Technique: How To Build A Table Top

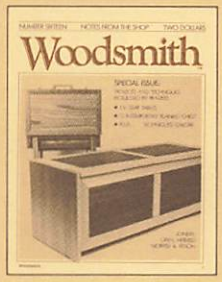

16

- Folding T.V. Tray Tables
- Contemporary Blanket Chest
- Joinery: Mitered Mortise And Tenon Joint
- Jig For Cutting Open Mortises On A Radial Saw
- Octagonal Redwood Planter
- Joinery: Taper/Bevel Cut
- Joinery: Rip/Bevel Cut

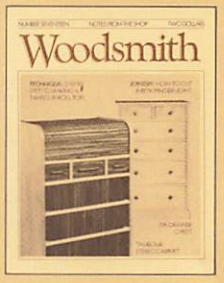

17

- Stereo Cabinet With Tambour Sliding Doors
- Roll-Top Wall Cabinet
- Technique: Step By Step To Making A Tambour
- Solid-Pine Six-Drawer Chest With Box-Joint Drawers
- Joinery: Box Joint
- Slide-Top Box Built With Finger Joints

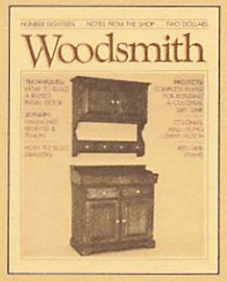

18

- Colonial Dry Sink With Raised Panel Doors
- Wall-Hung China Hutch To Match The Dry Sink
- Colonial Bed-Side Stand
- Joinery: Haunched Mortise And Tenon Joint For Raised Panel Doors
- Building Drawers With A Rabbet/Groove Joint
- Wooden Drawer Guides

Back Issues

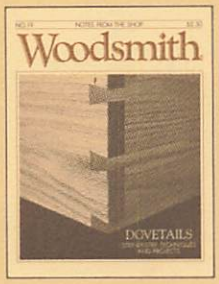

19

- Dovetails: An Overview Of How To Lay Out The Joint
- Dovetails: The Tools You Need To Cut It
- Dovetails: Step By Step To Cutting Dovetails By Hand
- Three-Drawer Coffee Table
- Technique: How To Build Dovetailed Drawers
- Shaker Step Stand

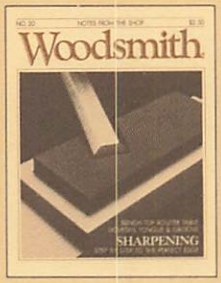

20

- Step By Step To Sharpening Chisels
- The Stones And Wheels Used For Sharpening
- Gate-Leg Buffet Table
- Bench-Top Router Table
- Wall Shelf Made With Sliding Dovetail
- Joinery: Dovetail Tongue & Groove On A Router Table
- Bread Board

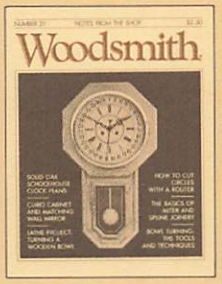

21

- Schoolhouse Clock
- Curio Cabinet With Glass Doors and Side Panels
- Round-Arch Wall Mirror To Match Curio Cabinet
- Bowl Turning: The Tools And Techniques
- Step By Step To Turning A Wooden Fruit Bowl
- Joinery: Miter And Spline
- Lazy Susan Server

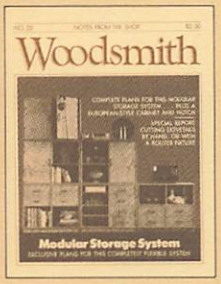

22

- Modular Storage System: Interchangeable Doors, Drawers, Shelves
- European-Style Cabinet Featuring Glass Doors
- Step By Step To Cutting Lap Dovetails By Hand
- Machine-Cut Dovetail: How To Cut Lap Dovetails With A Router
- Dovetail Lamp Base

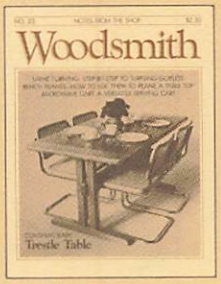

23

- Contemporary Trestle Table: A Clean-Lined Version Of A Classic
- Plans For A Trestle Bench To Match The Table
- Microwave/Serving Cart
- Step By Step To Turning Two Classic Goblets
- Bench Planes: How To Adjust and Use Bench Planes
- Sharpening A Plane Iron

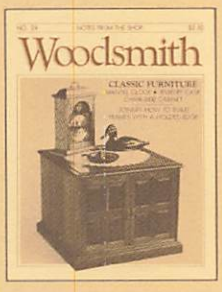

24

- Chair-Side Walnut Cabinet With Four-Panel Doors
- Mantel Clock With A "Moving Moon" Dial
- Jewelry Case
- Vanity Mirror With Swivel Mirror and Drawer Base
- Mortise and Tenon Joinery: Molded Edge and Open
- Japanese Water Stones and Diamond Stones

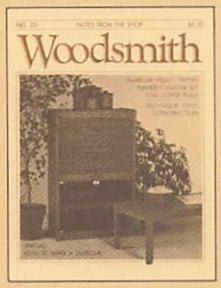

25

- Tambour Video Cabinet For T.V. And Video Equipment
- Technique: How To Build A Tambour (Roll Top)
- Oak Coffee Table
- Shop Storage Cabinet
- Turned Canister Set
- Turned Bowl With Lid
- Joinery: Step By Step To Stave Construction

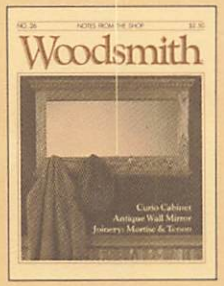

26

- Walnut Curio Cabinet: Two Units With Glass Doors
- Small Wall-Hung Display Case With Glass Door
- Antique Wall Mirror
- Joinery: Mortise and Tenon
- The Step-By-Step Basics Of Building a Frame
- Tools of the Trade: Bits Used For Mortising

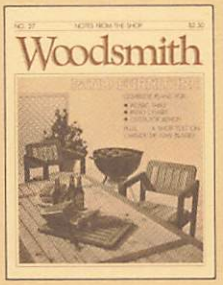

27

- Patio Furniture: Matching Picnic Table, Lawn Chair, and Outdoor Bench
- Outdoor Finishes: How to Choose and Use for Best Results
- Joinery: Two Methods for Cutting Half Laps
- Tools of the Trade: A Complete Review of Carbide-Tipped Saw Blades

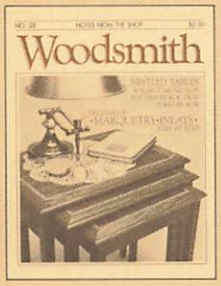

28

- Nestled Tables: 3 Tables That Slide Together
- Music Box with Inlaid Top
- Marquetry Techniques: Router Method for Inlays
- Pin Router for *Woodsmith's* Router Table
- Pin Router Projects: Snack Tray and Divided Box
- Keeping Carbide Saw Blades Sharp

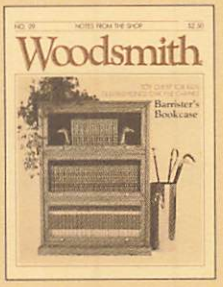

29

- Three Drawer Frame & Panel File Cabinet for Big Organizers
- Toy Chest with a Sliding Top and Two Drawers for Little Organizers
- Barrister's Bookcase with Glass Doors for Book Organizers
- Joinery: Stub Tenon Frames & Plywood Panels

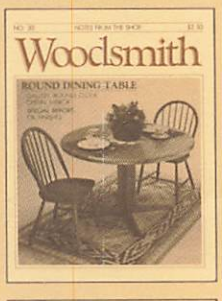

30

- Round Dining Table With An Expansion Leaf
- Cheval Mirror That Pivots On A Two-Post Stand
- Round Clock
- Special Report on Oil Finishes: What They Are And How to Use Them
- Joinery: Miter And Spline
- Router Jig For Cutting Centered Grooves